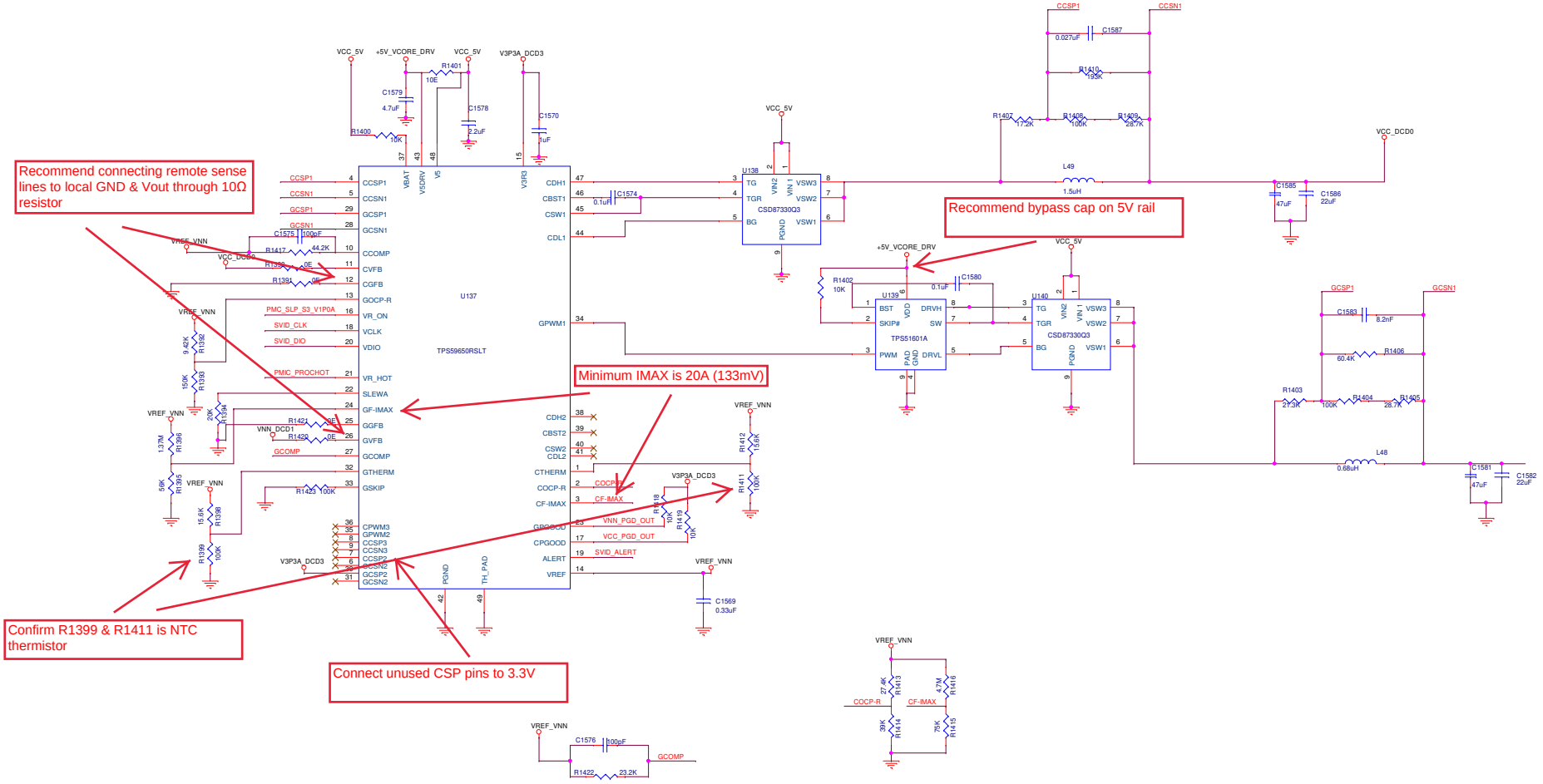

Title	<Title>		
Size A2	Document Number <Doc>		Rev <RevCode>
Date: Tuesday, November 08, 2022	Sheet 1 of 1		