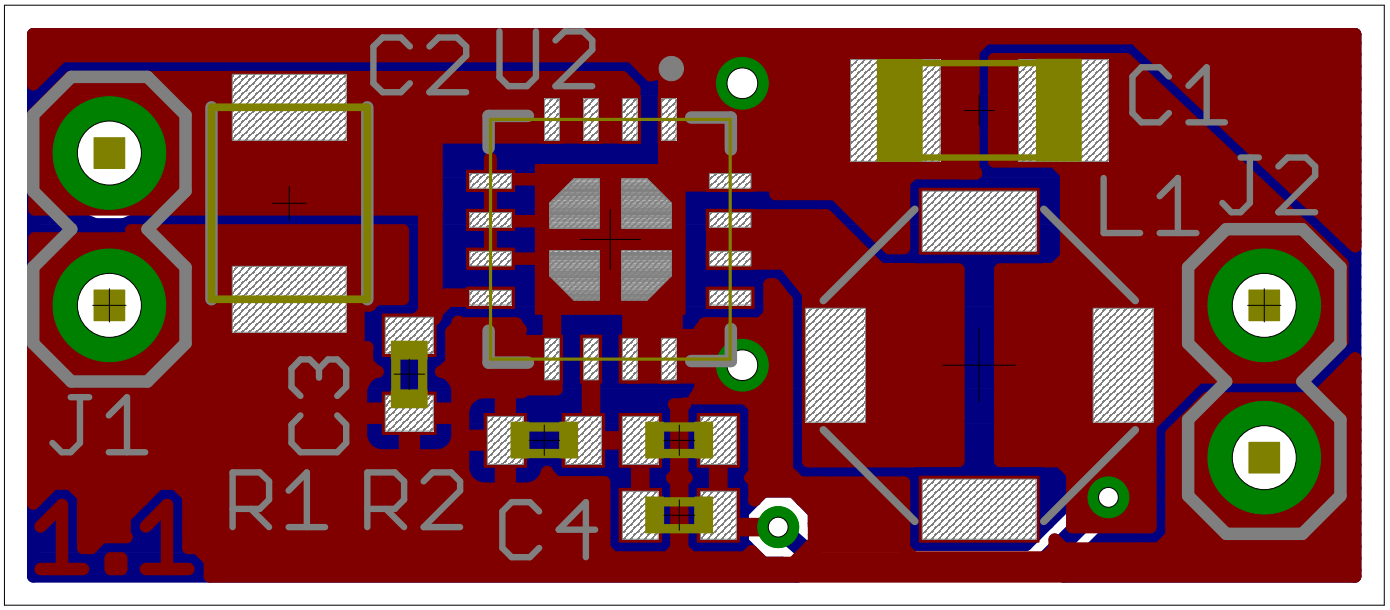
C2
U2
C1
L1
J2
J1
C3
R1
R2
C4
1.1