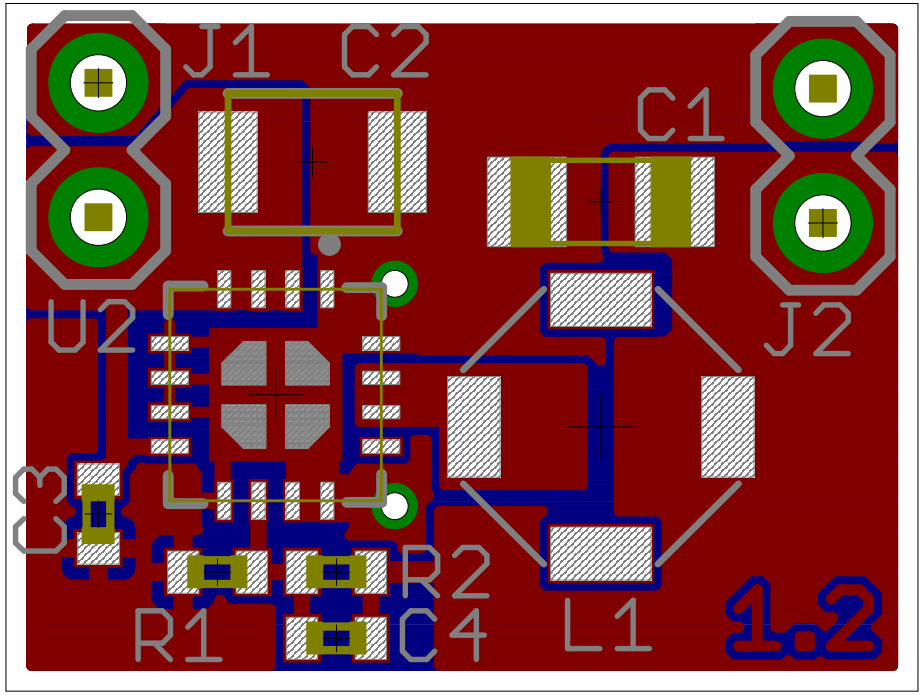
J1
C2
C1
U2
J2
C3
R2
R1
C4
L1
1.2