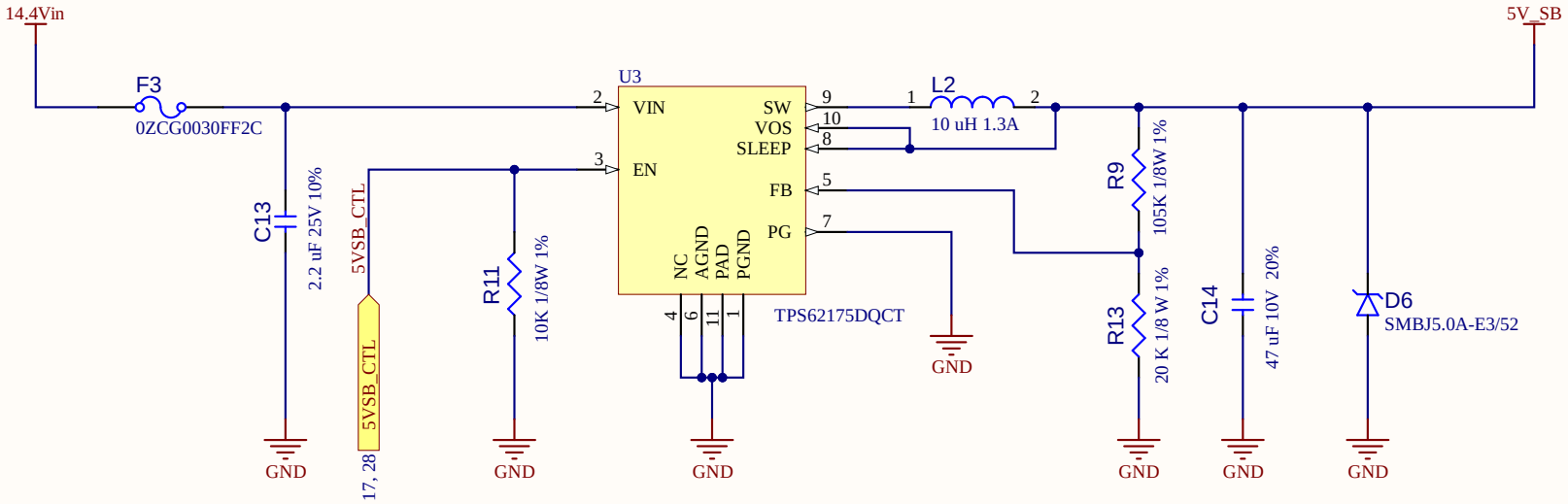

Title		
Size A	Number	Revision
Date: 6-07-2024		Sheet of
File: \\..\TPS62175DQCT.SchDoc		Drawn By: