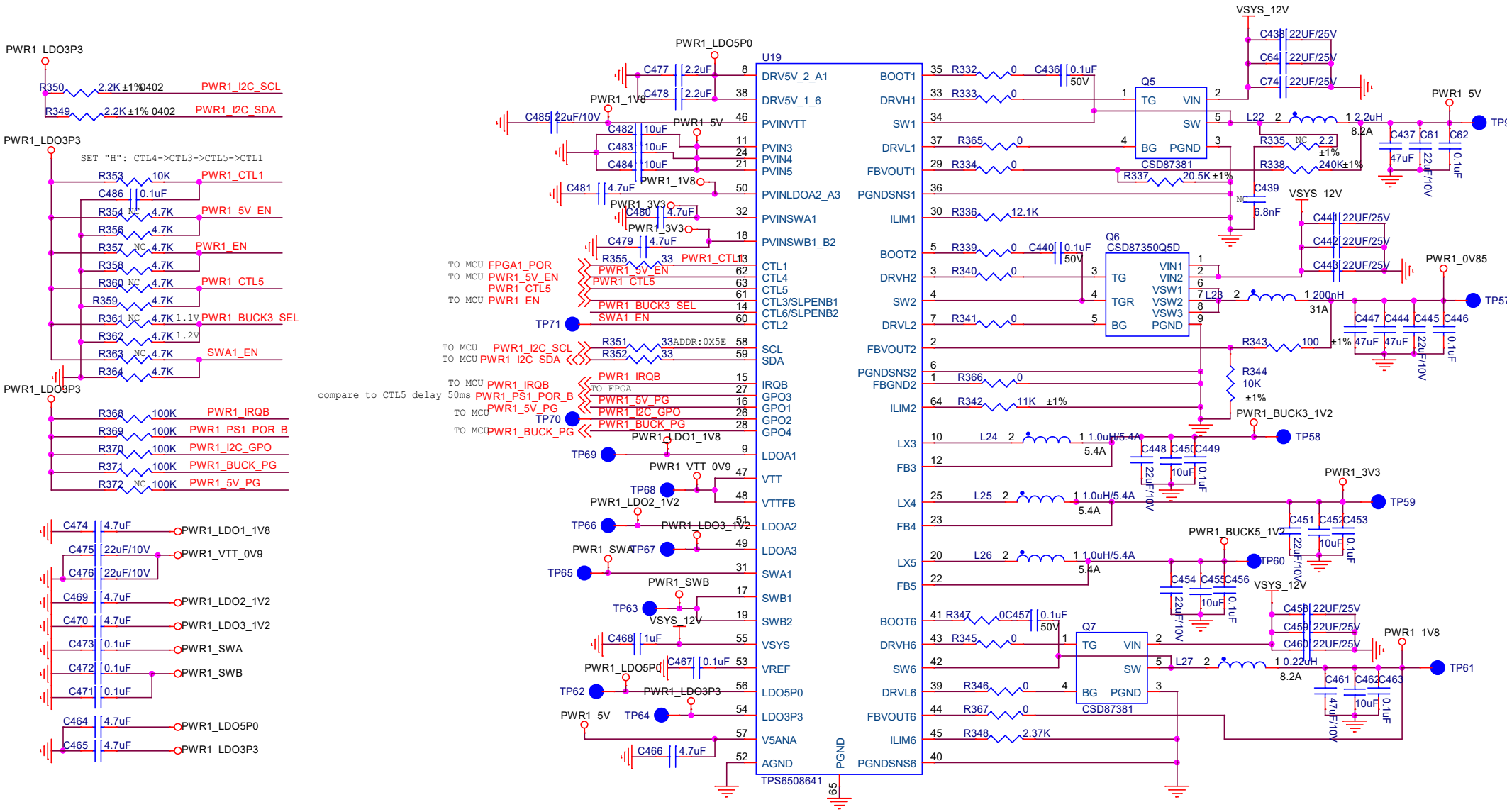
PWR1_LDO3P3
R350 2.2K ±1% 0402 PWR1_I2C_SCL
R349 2.2K ±1% 0402 PWR1_I2C_SDA
SET "H": CTL4->CTL3->CTL5->CTL1
R353 10K PWR1_CTL1
C486 0.1uF
R354 NC 4.7K PWR1_5V_EN
R356 4.7K
R357 NC 4.7K PWR1_EN
R358 4.7K
R360 NC 4.7K PWR1_CTL5
R359 4.7K
R361 NC 4.7K 1.1V PWR1_BUCK3_SEL
R362 4.7K 1.2V
R363 NC 4.7K SWA1_EN
R364 4.7K
R368 100K PWR1_IRQB
R369 100K PWR1_PS1_POR_B
R370 100K PWR1_I2C_GPO
R371 100K PWR1_BUCK_PG
R372 NC 100K PWR1_5V_PG
C474 4.7uF PWR1_LDO1_1V8
C475 22uF/10V PWR1_VTT_0V9
C476 22uF/10V
C469 4.7uF PWR1_LDO2_1V2
C470 4.7uF PWR1_LDO3_1V2
C473 0.1uF PWR1_SWA
C472 0.1uF PWR1_SWB
C471 0.1uF
C464 4.7uF PWR1_LDO5P0
C465 4.7uF PWR1_LDO3P3
PWR1_LDO5P0
C477 2.2uF
C478 2.2uF
PWR1_1V8
C485 22uF/10V
PWR1_5V
C482 10uF
C483 10uF
C484 10uF
C481 4.7uF
PWR1_3V3
C480 4.7uF
C479 4.7uF
R355 33 PWR1_CTL1
TO MCU FPGA1_POR
TO MCU PWR1_5V_EN
PWR1_CTL5
TO MCU PWR1_EN
PWR1_BUCK3_SEL
SWA1_EN
TP71
TO MCU PWR1_I2C_SCL
TO MCU PWR1_I2C_SDA
R351 33 ADDR:0X5E
R352 33
PWR1_IRQB
TO FPGA
compare to CTL5 delay 50ms PWR1_PS1_POR_B
PWR1_5V_PG
TO MCU
TP70
PWR1_I2C_GPO
PWR1_BUCK_PG
TO MCU PWR1_BUCK_PG
PWR1_LDO1_1V8
TP69
PWR1_VTT_0V9
TP68
PWR1_LDO2_1V2
TP66
PWR1_LDO3_1V2
PWR1_SWA
TP67
TP65
PWR1_SWB
TP63
VSYS_12V
C468 1uF
PWR1_LDO5P0
C467 0.1uF
TP62
PWR1_LDO3P3
PWR1_5V
TP64
C466 4.7uF
U19
DRV5V_2_A1
DRV5V_1_6
PVINVTT
PVIN3
PVIN4
PVIN5
PVINLDOA2_A3
PVINSWA1
PVINSWB1_B2
CTL1
CTL4
CTL5
CTL3/SLPENB1
CTL6/SLPENB2
CTL2
SCL
SDA
IRQB
GPO3
GPO1
GPO2
GPO4
LDOA1
VTT
VTTFB
LDOA2
LDOA3
SWA1
SWB1
SWB2
VSYS
VREF
LDO5P0
LDO3P3
V5ANA
AGND
TPS6508641
PGND
65
BOOT1
DRVH1
SW1
DRVL1
FBVOUT1
PGNDSNS1
ILIM1
BOOT2
DRVH2
SW2
DRVL2
FBVOUT2
PGNDSNS2
FBGND2
ILIM2
LX3
FB3
LX4
FB4
LX5
FB5
BOOT6
DRVH6
SW6
DRVL6
FBVOUT6
ILIM6
PGNDSNS6
R332 0 C436 0.1uF 50V
R333 0
R365 0
R334 0
R337 20.5K ±1%
R336 12.1K
R339 0 C440 0.1uF 50V
R340 0
R341 0
R366 0
R342 11K ±1%
R343 100 ±1%
R344 10K ±1%
PWR1_BUCK3_1V2
TP58
L24 2 1 1.0uH/5.4A 5.4A
C448 22uF/10V C450 10uF C449 0.1uF
L25 2 1 1.0uH/5.4A 5.4A
PWR1_3V3
TP59
C451 22uF/10V C452 10uF C453 0.1uF
L26 2 1 1.0uH/5.4A 5.4A
PWR1_BUCK5_1V2
TP60
C454 22uF/10V C455 10uF C456 0.1uF
R347 0 C457 0.1uF 50V
R345 0
R346 0
R367 0
R348 2.37K
Q5
TG VIN
SW
BG PGND
CSD87381
Q6
CSD87350Q5D
VIN1 VIN2 VSW1 VSW2 VSW3
Q7
L22 2 1 2.2uH 8.2A
R335 NC 2.2 ±1%
R338 240K ±1%
C439 NC 6.8nF
C437 47uF C61 22uF/10V C62 0.1uF
VSYS_12V
C438 22UF/25V
C64 22UF/25V
C74 22UF/25V
C441 22UF/25V
C442 22UF/25V
C443 22UF/25V
PWR1_5V
TP59
PWR1_0V85
TP57
L23 2 1 200nH 31A
C447 47uF C444 47uF C445 22uF/10V C446 0.1uF
L27 2 1 0.22uH 8.2A
C458 22UF/25V
C459 22UF/25V
C460 22UF/25V
PWR1_1V8
TP61
C461 47uF/10V C462 10uF C463 0.1uF