TPS6521909 Powering AM62A

(non-functional safety, no low power modes, supports VDD_CORE = 0.75V or 0.85V)

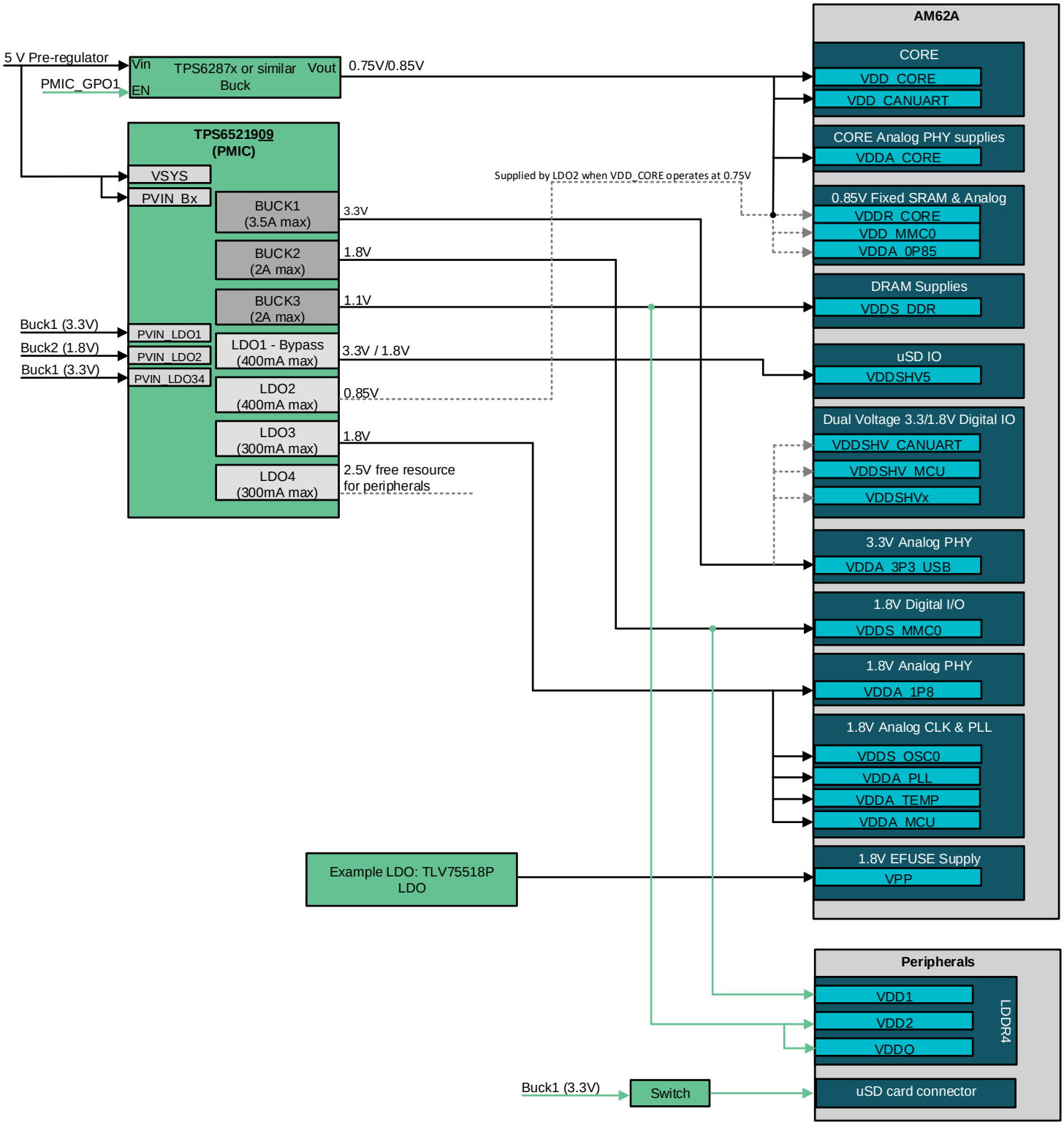

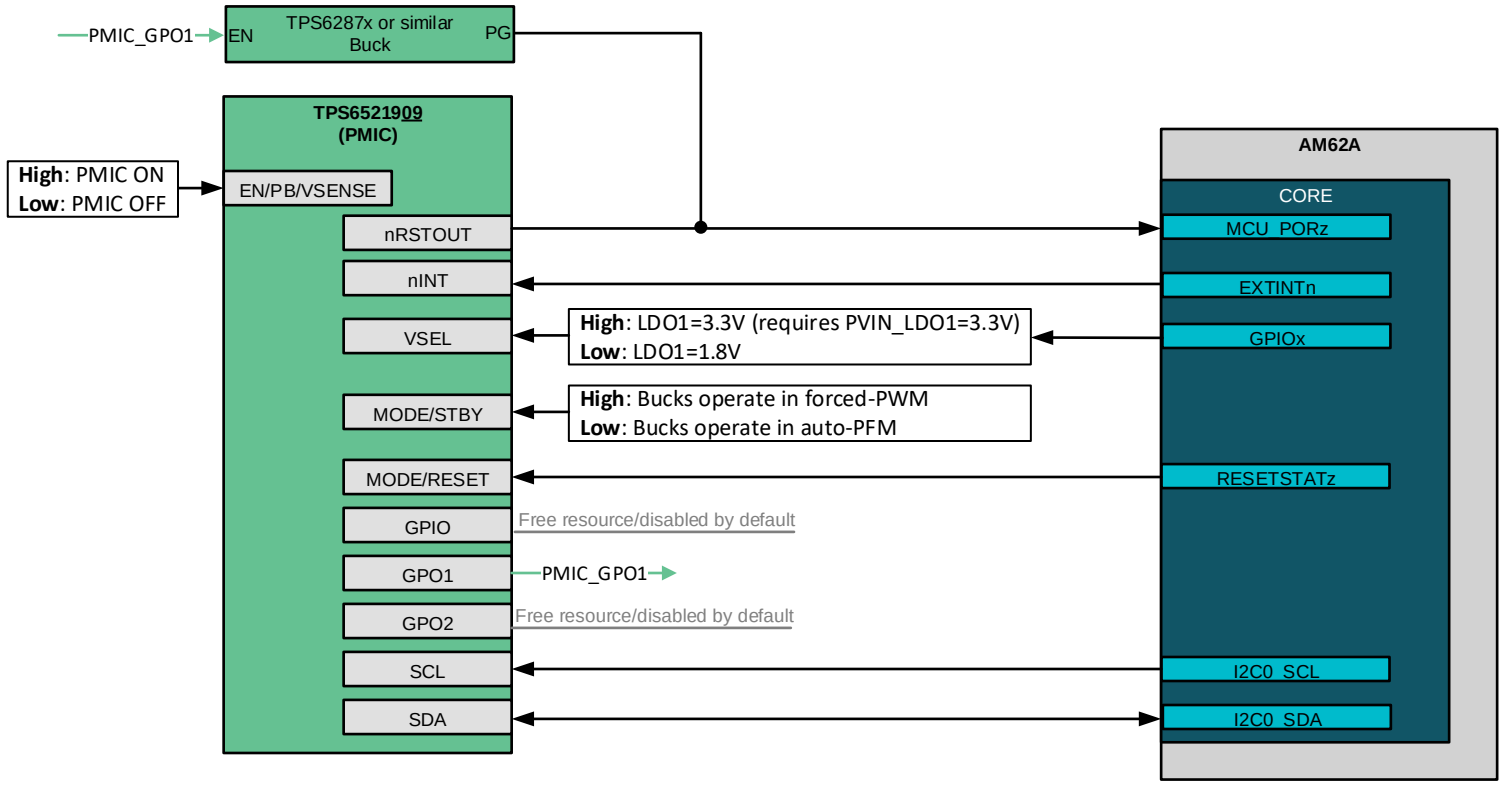
PMIC_GPO1
EN
TPS6287x or similar Buck
PG
TPS6521909 (PMIC)
High: PMIC ON
Low: PMIC OFF
EN/PB/VSENSE
nRSTOUT
nINT
VSEL
High: LDO1=3.3V (requires PVIN_LDO1=3.3V)
Low: LDO1=1.8V
MODE/STBY
High: Bucks operate in forced-PWM
Low: Bucks operate in auto-PFM
MODE/RESET
GPIO
Free resource/disabled by default
GPO1
PMIC_GPO1
GPO2
Free resource/disabled by default
SCL
SDA
AM62A
CORE
MCU_PORz
EXTINTn
GPIOx
RESETSTATz
I2C0_SCL
I2C0_SDA