Low Noise Dual Supply +-5V / 100mA

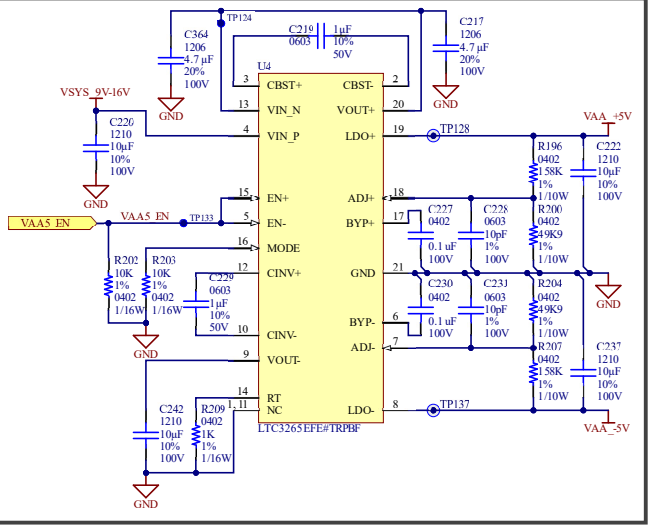

Low Noise Dual Supply +-15V / 100mA

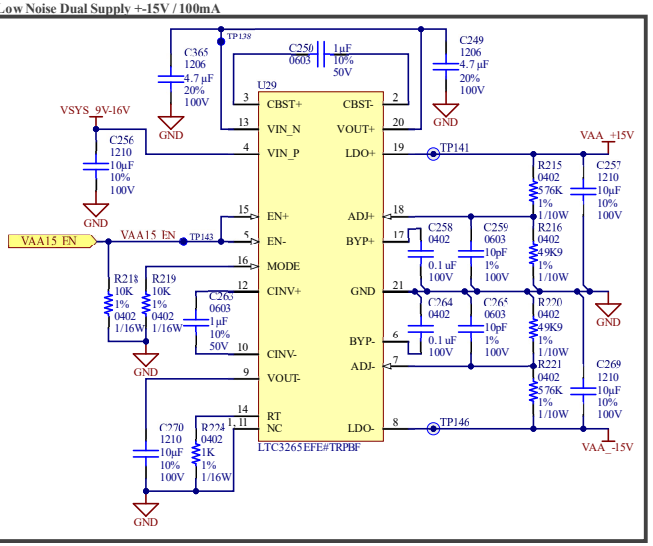

Flexible PMIC for digital rails. 1.2V / 2A - 1.8V / 2A - 3.3V / 1A - 6.0V / 1A - 2.5V / 450mA
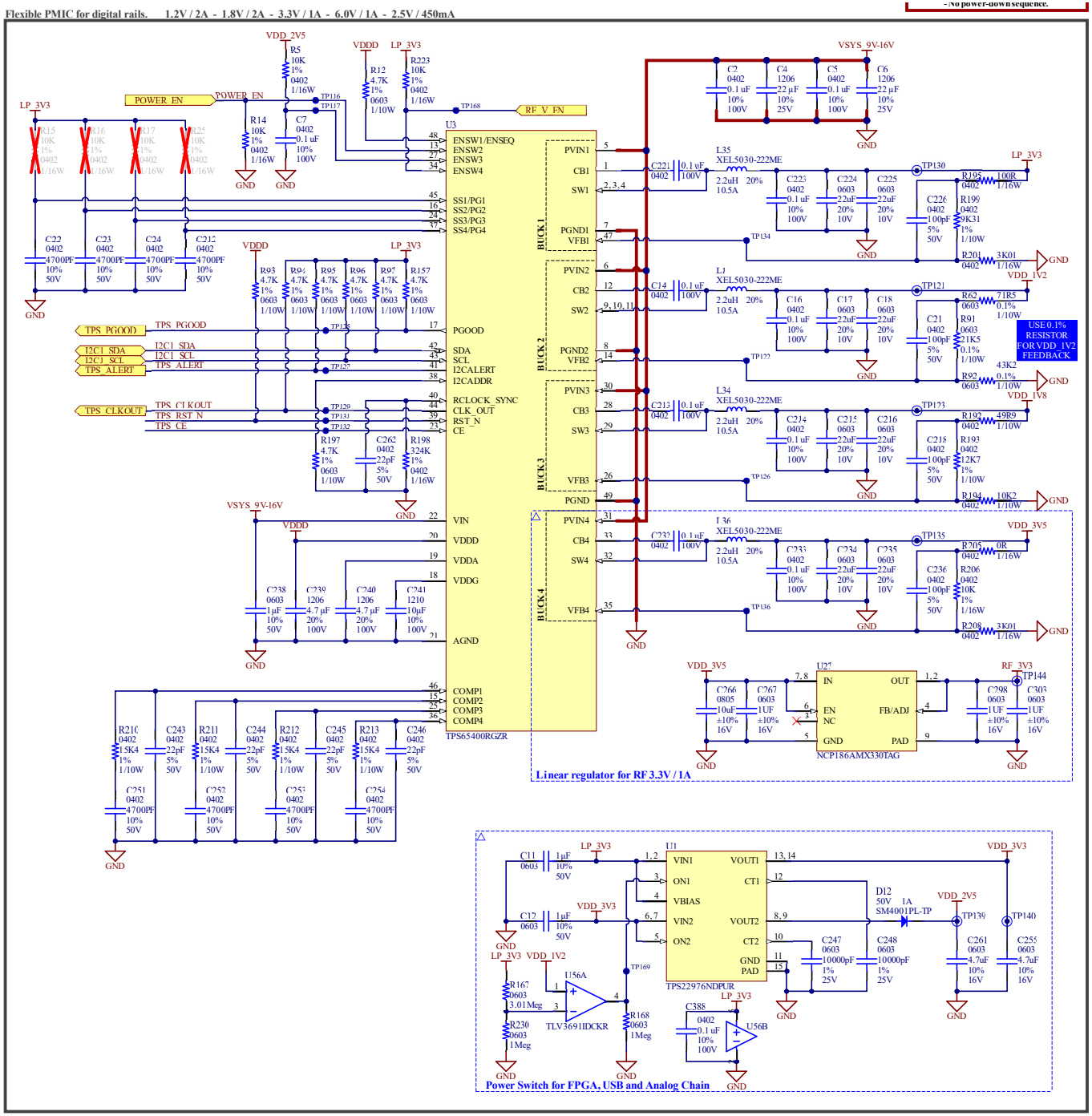
- No power-down sequence.