PLACE BULK DECOUPLING CAPS ON THIS PAGE

POWER SUPPLIES QUAD PSU 3 : 1.0V/3.3V/3.3V_PCIE/1.5V

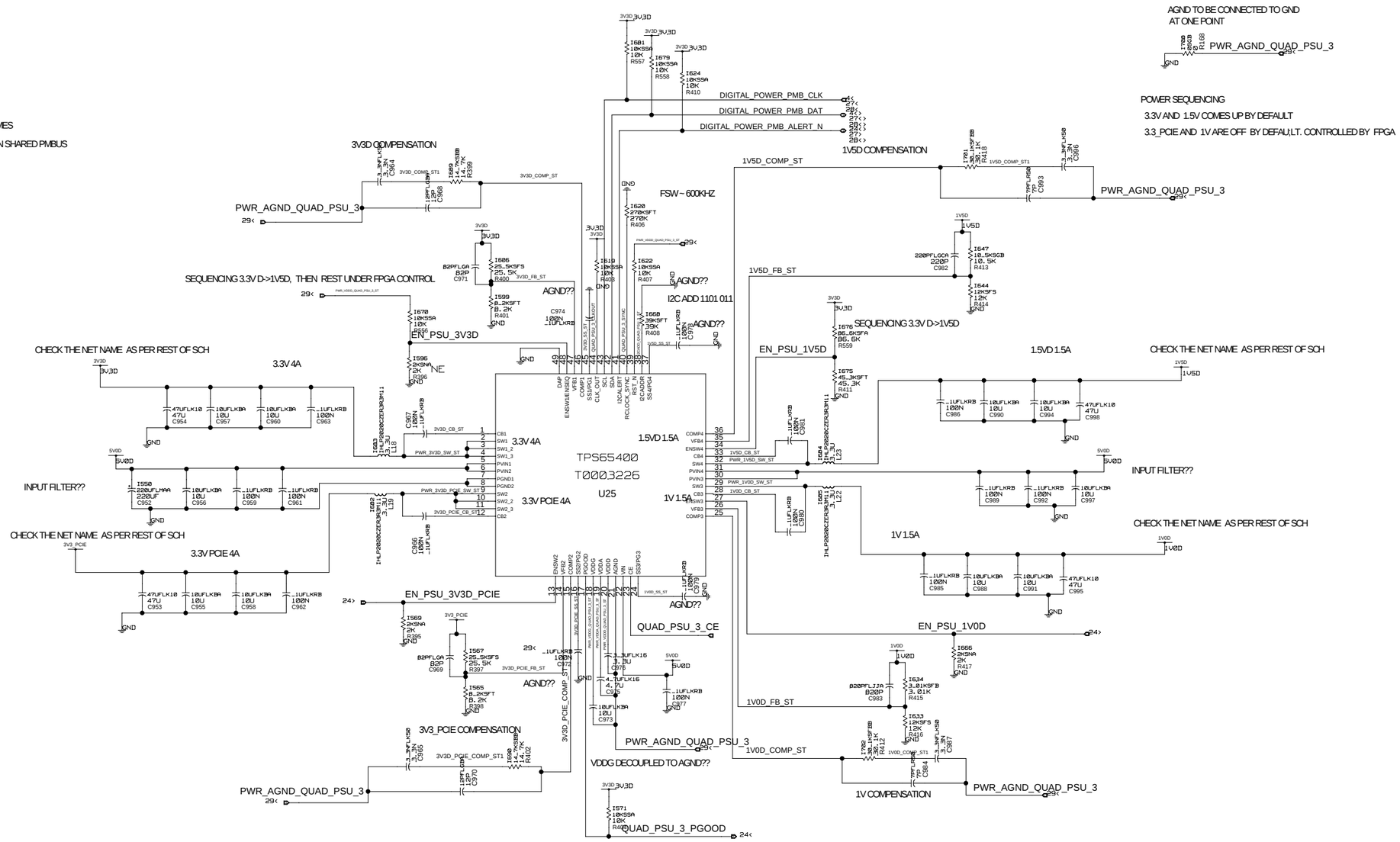

TO BE COMPLETED:

CHECK POWER NET NAMES

CHECK THE PULL UP ON SHARED PMBUS

POWER SEQUENCING

3.3V AND 1.5V COMES UP BY DEFAULT

3.3_PCIE AND 1V ARE OFF BY DEFAULT. CONTROLLED BY FPGA

TEKTELIC COMMUNICATIONS INC.		
TITLE: KIPU POWER SUPPLIES: 1.0/3.3/3.3_PCIE/1.5V	REV: 01	DATE: 15/01/2015
		TCODE: