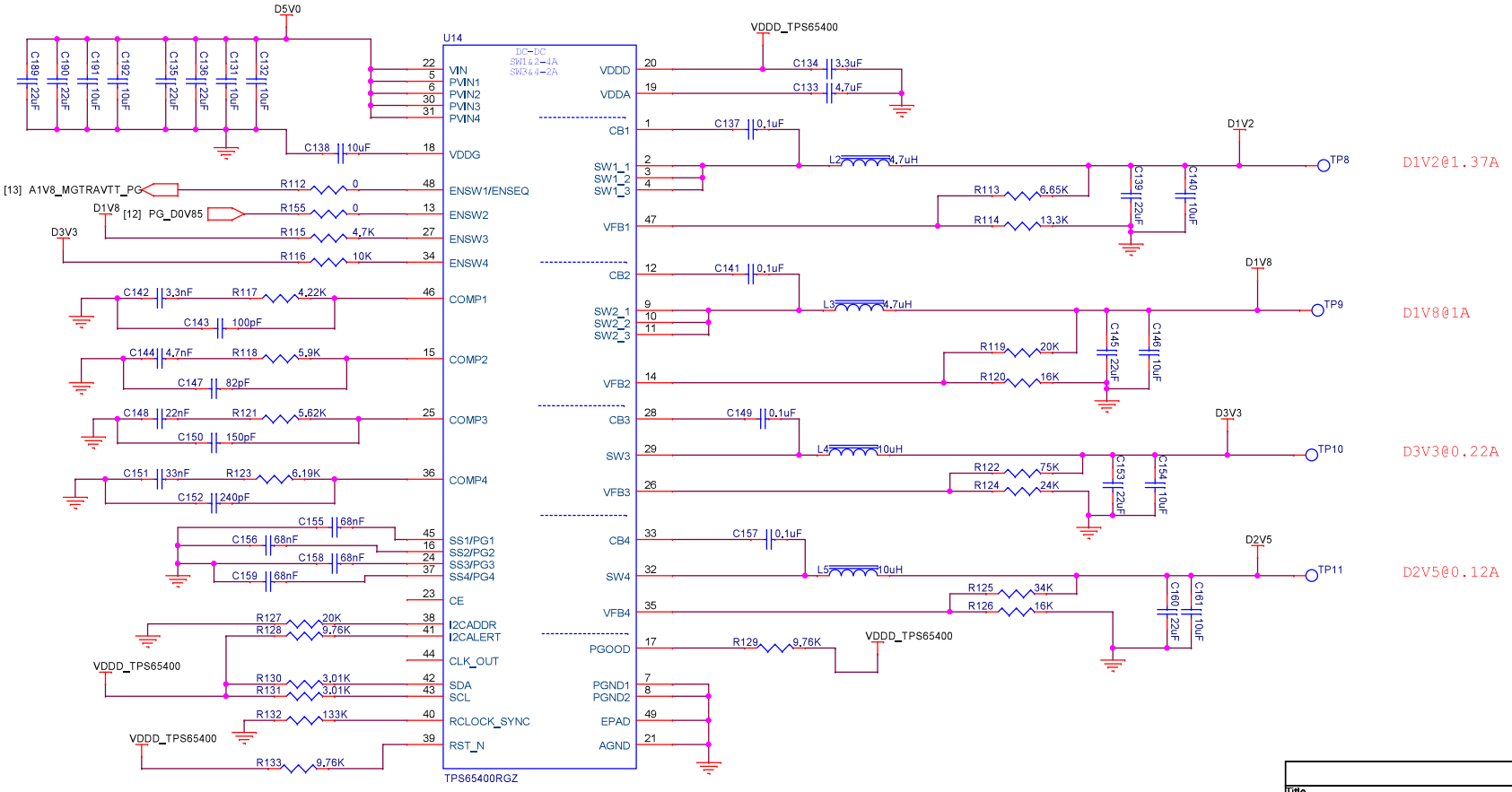

Title	DeePhi Technology Co., Ltd.		
Size A3	Document Number DPB1301_V100		Rev V100
Date: Thursday, November 30, 2017	Sheet 12 of 15		