TYPE-C DFP CONTROLLER IC

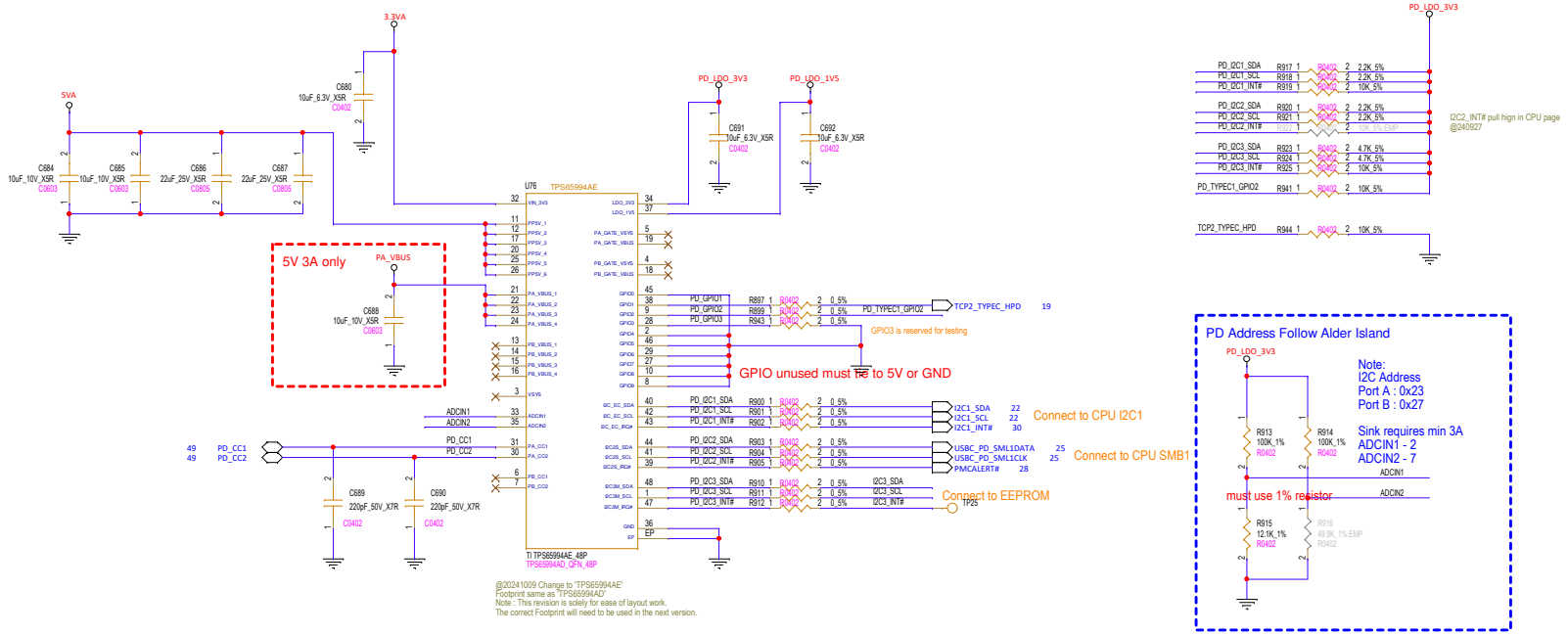

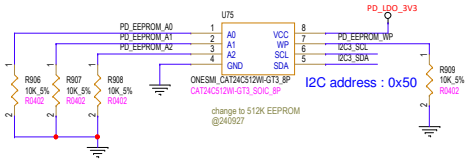

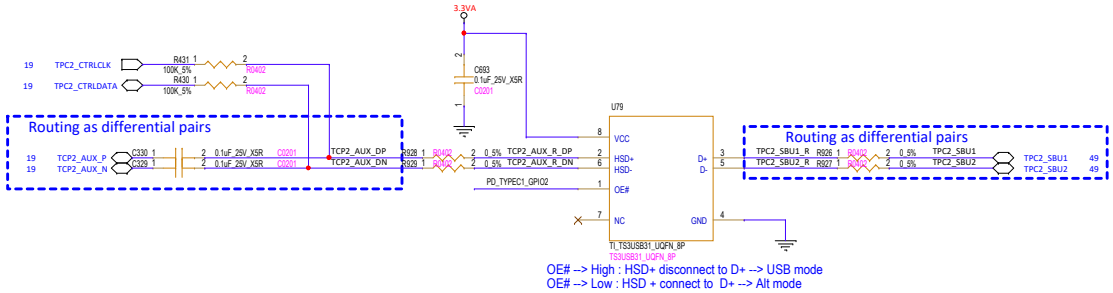

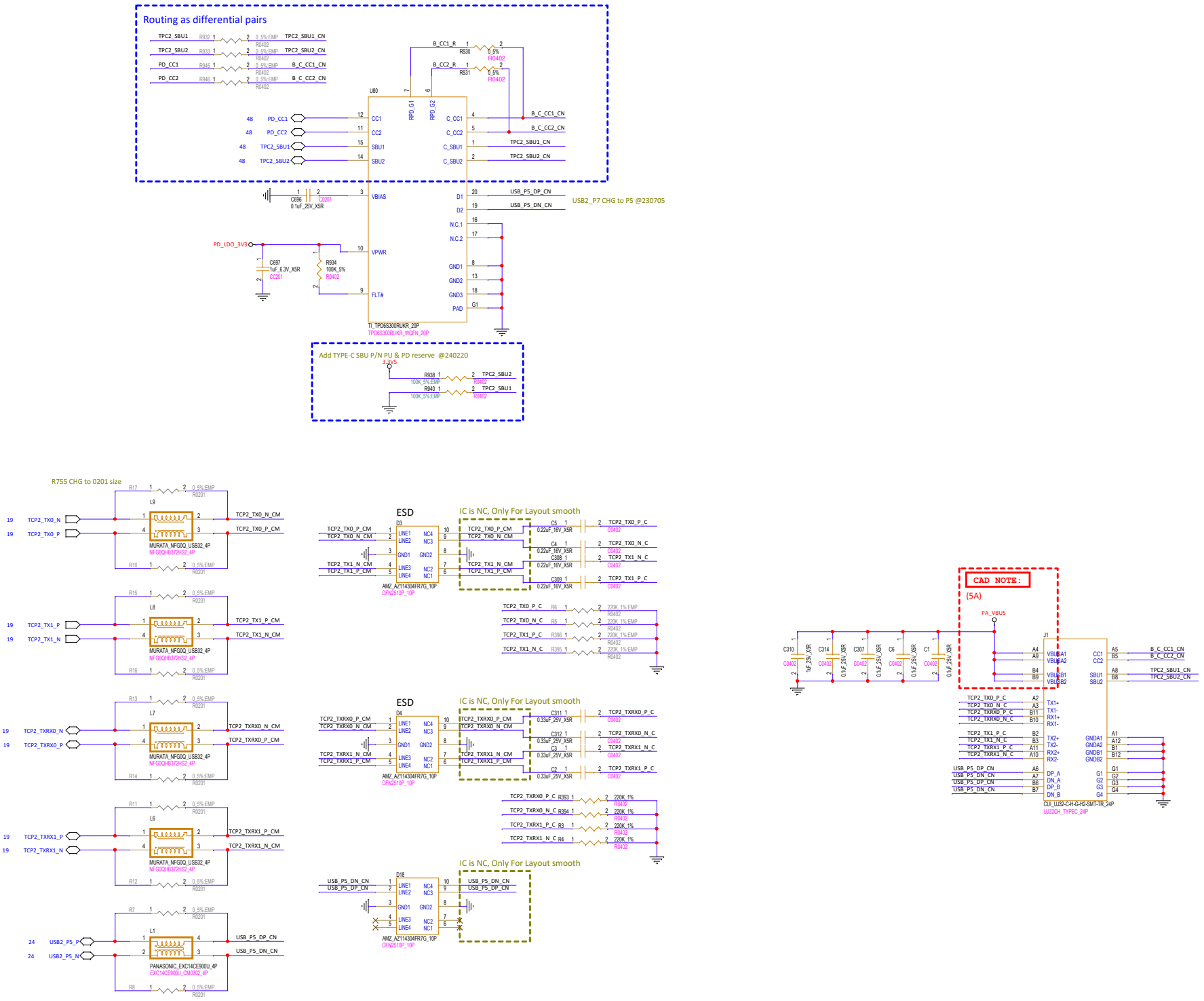
Routing as differential pairs
TPC2_SBU1 R932 0_5%_EMP R0402 TPC2_SBU1_CN
TPC2_SBU2 R933 0_5%_EMP R0402 TPC2_SBU2_CN
PD_CC1 R945 0_5%_EMP R0402 B_C_CC1_CN
PD_CC2 R946 0_5%_EMP R0402 B_C_CC2_CN
B_CC1_R R930 0_5% R0402
B_CC2_R R931 0_5% R0402
U80
RPD_G1
RPD_G2
48 PD_CC1 CC1
48 PD_CC2 CC2
48 TPC2_SBU1 SBU1
48 TPC2_SBU2 SBU2
C_CC1 B_C_CC1_CN
C_CC2 B_C_CC2_CN
C_SBU1 TPC2_SBU1_CN
C_SBU2 TPC2_SBU2_CN
C696 0.1uF_25V_X5R C0201
VBIAS
D1 USB_P5_DP_CN
D2 USB_P5_DN_CN
USB2_P7 CHG to P5 @230705
N.C.1
N.C.2
PD_LDO_3V3
C697 1uF_6.3V_X5R C0201
R934 100K_5% R0402
VPWR
GND1
GND2
GND3
PAD
FLT#
TI_TPD6S300RUKR_20P
TPD6S300RUKR_WQFN_20P
Add TYPE-C SBU P/N PU & PD reserve @240220
3.3VS
R938 100K_5%_EMP R0402 TPC2_SBU2
R940 100K_5%_EMP R0402 TPC2_SBU1
R755 CHG to 0201 size
R17 0_5%_EMP R0201
L9
19 TCP2_TX0_N
19 TCP2_TX0_P
TCP2_TX0_N_CM
TCP2_TX0_P_CM
MURATA_NFG0Q_USB32_4P
NFG0QHB372HS2_4P
R10 0_5%_EMP R0201
R15 0_5%_EMP R0201
L8
19 TCP2_TX1_P
19 TCP2_TX1_N
TCP2_TX1_P_CM
TCP2_TX1_N_CM
MURATA_NFG0Q_USB32_4P
NFG0QHB372HS2_4P
R16 0_5%_EMP R0201
R13 0_5%_EMP R0201
L7
19 TCP2_TXRX0_N
19 TCP2_TXRX0_P
TCP2_TXRX0_N_CM
TCP2_TXRX0_P_CM
MURATA_NFG0Q_USB32_4P
NFG0QHB372HS2_4P
R14 0_5%_EMP R0201
R11 0_5%_EMP R0201
L6
19 TCP2_TXRX1_P
19 TCP2_TXRX1_N
TCP2_TXRX1_P_CM
TCP2_TXRX1_N_CM
MURATA_NFG0Q_USB32_4P
NFG0QHB372HS2_4P
R12 0_5%_EMP R0201
R7 0_5%_EMP R0201
L1
24 USB2_P5_P
24 USB2_P5_N
USB_P5_DP_CN
USB_P5_DN_CN
PANASONIC_EXC14CE900U_4P
EXC14CE900U_CMI0302_4P
R8 0_5%_EMP R0201
ESD
IC is NC, Only For Layout smooth
D3
TCP2_TX0_P_CM
TCP2_TX0_N_CM
TCP2_TX1_N_CM
TCP2_TX1_P_CM
LINE1 NC4
LINE2 NC3
GND1 GND2
LINE3 NC2
LINE4 NC1
AMZ_AZ114304FR7G_10P
DFN2510P_10P
C5 0.22uF_16V_X5R C0402 TCP2_TX0_P_C
C4 0.22uF_16V_X5R C0402 TCP2_TX0_N_C
C308 0.22uF_16V_X5R C0402 TCP2_TX1_N_C
C309 0.22uF_16V_X5R C0402 TCP2_TX1_P_C
R6 220K_1%_EMP R0402
R5 220K_1%_EMP R0402
R396 220K_1%_EMP R0402
R395 220K_1%_EMP R0402
D4
TCP2_TXRX0_P_CM
TCP2_TXRX0_N_CM
TCP2_TXRX1_N_CM
TCP2_TXRX1_P_CM
C311 0.33uF_25V_X5R C0402 TCP2_TXRX0_P_C
C312 0.33uF_25V_X5R C0402 TCP2_TXRX0_N_C
C3 0.33uF_25V_X5R C0402 TCP2_TXRX1_N_C
C2 0.33uF_25V_X5R C0402 TCP2_TXRX1_P_C
R393 220K_1% R0402
R394 220K_1% R0402
R3 220K_1% R0402
R4 220K_1% R0402
D18
USB_P5_DN_CN
USB_P5_DP_CN
AMZ_AZ114304FR7G_10P
DFN2510P_10P
CAD NOTE:
(5A)
PA_VBUS
C310 1uF_25V_X5R C0402
C314 0.1uF_25V_X5R C0402
C307 0.1uF_25V_X5R C0402
C6 0.1uF_25V_X5R C0402
C1 0.1uF_25V_X5R C0402
J1
VBUSA1 VBUSA2 VBUSB1 VBUSB2
CC1 CC2
SBU1 SBU2
TX1+ TX1- RX1+ RX1-
TX2+ TX2- RX2+ RX2-
GNDA1 GNDA2 GNDB1 GNDB2
DP_A DN_A DP_B DN_B
B_C_CC1_CN
B_C_CC2_CN
TPC2_SBU1_CN
TPC2_SBU2_CN
CUI_UJ32-C-H-G-HZ-SMT-TR_24P
UJ32CH_TYPEC_24P