| REVISION RECORD | | | |
|---|---|---|---|
| LTR | ECO NO: | APPROVED: | DATE: |
| | | | |
| | | | |
| | | | |
| | | | |

## IR LED DRIVER

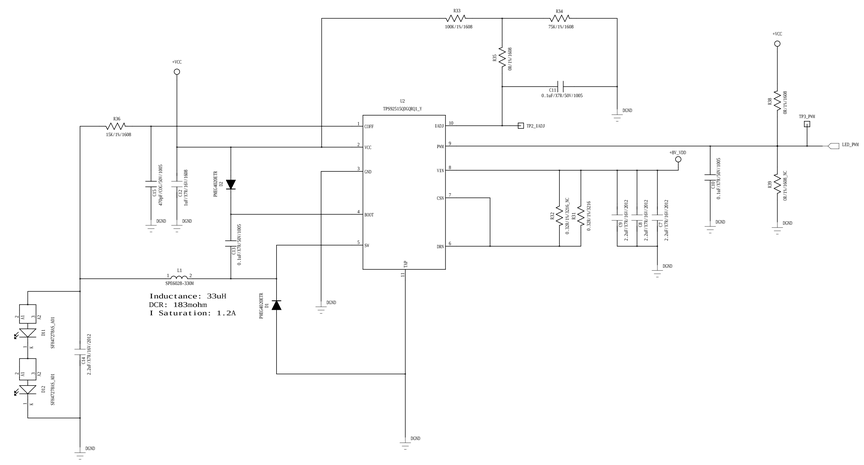

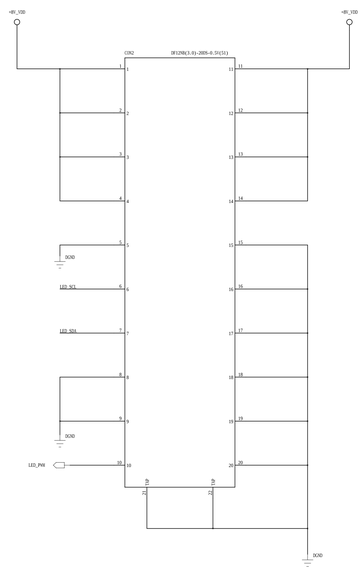
## B to B Connector