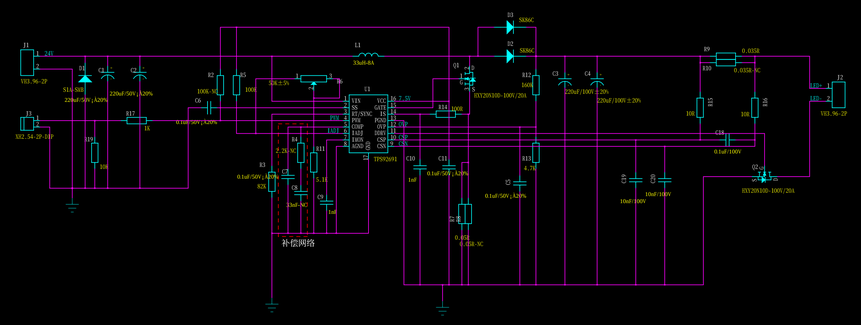
J1
VEJ.96-2P
J2
VEJ.96-2P
J3
DZ2.54-2P-3.5P
D1
S1G SMA
220uF/50V ±20%
C1
C2
220uF/50V ±20%
R17
1K
R19
10K
R2
100K
R5
100K
C6
0.1uF/50V ±20%
50K ±5%
L1
33uH-6A
U1
TPS92691
R4
2.2K/5C
R11
5.1K
R3
0.1uF/50V ±20%
820
C7
C8
33uF-5C
C9
1uF
R14
100K
Q1
HXY2010D-100V/20A
D3
SS36C
D2
SS86C
R12
160K
C3
220uF/100V ±20%
C4
220uF/100V ±20%
R9
0.035R
R10
0.035R-5C
R15
10K
R16
10K
C18
0.1uF/100V
Q2
HXY2010D-100V/20A
R13
4.7K
C10
1uF
C11
0.1uF/50V ±20%
C5
0.1uF/50V ±20%
R8
0.05R
0.05R-5C
C19
10uF/100V
C20
10uF/100V
12V-
12V+
补偿网络