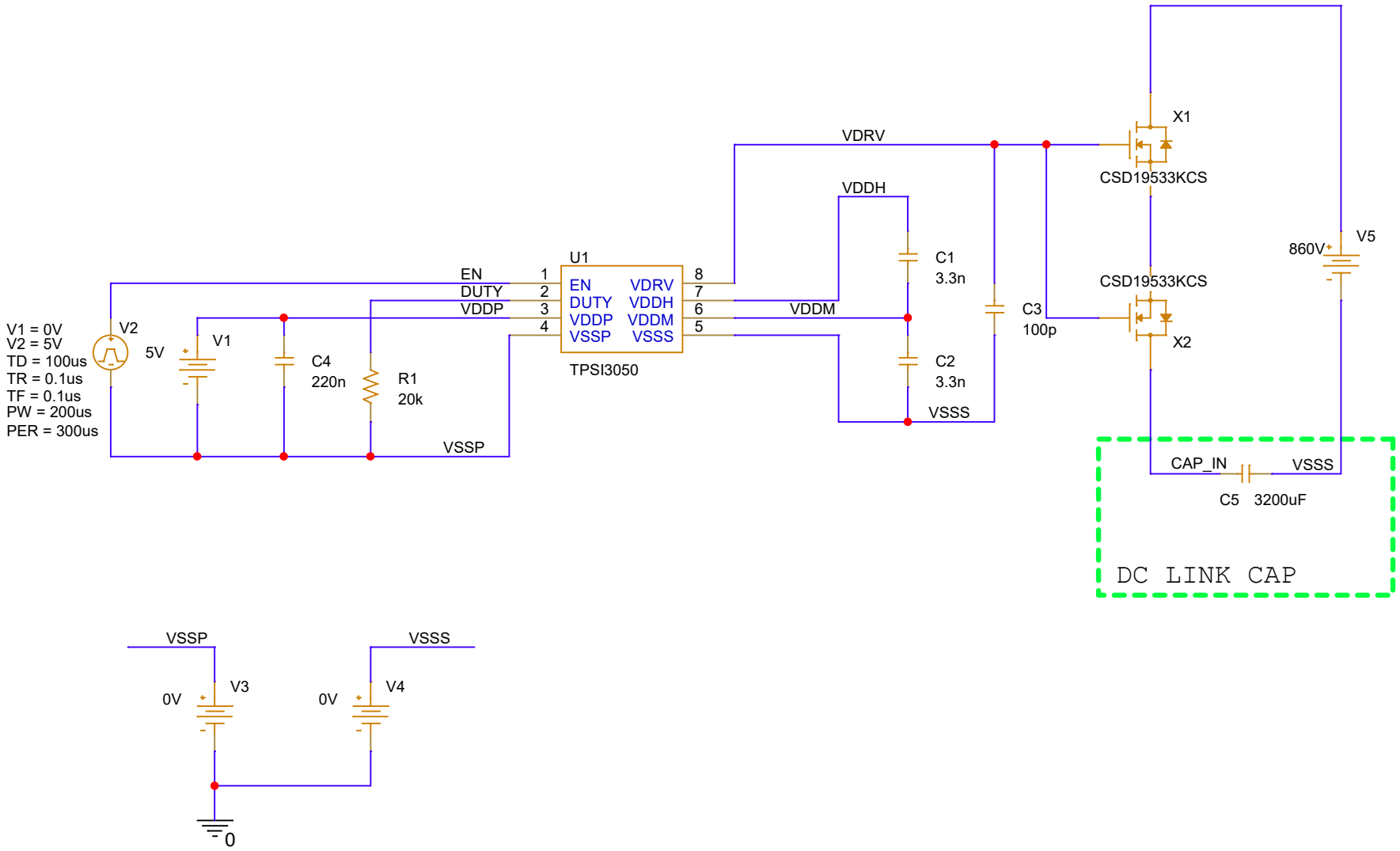
V1 = 0V
V2 = 5V
TD = 100us
TR = 0.1us
TF = 0.1us
PW = 200us
PER = 300us
V2
5V
V1
C4
220n
R1
20k
VSSP
EN
DUTY
VDDP
U1
EN
DUTY
VDDP
VSSP
VDRV
VDDH
VDDM
VSSS
TPSI3050
VDRV
VDDH
C1
3.3n
VDDM
C2
3.3n
VSSS
C3
100p
X1
CSD19533KCS
CSD19533KCS
X2
860V
V5
CAP_IN
VSSS
C5 3200uF
DC LINK CAP
VSSP
VSSS
0V
V3
0V
V4
0