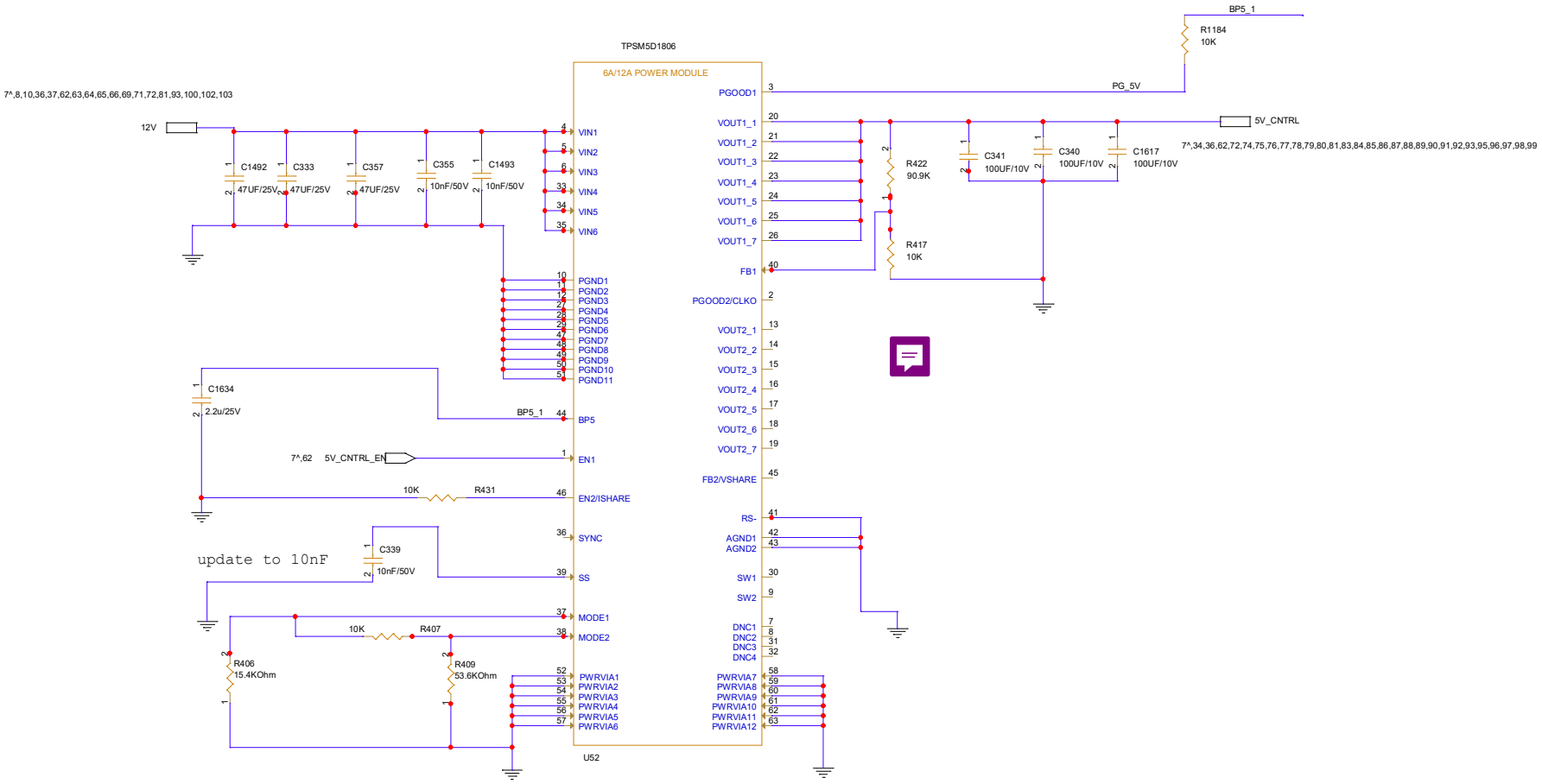

MODE, SS, BP, FB
PINS SHOULD BE CONNECTED TO AGND SEPARATELY
AGND SHOULD BE KEPT AWAY FROM NOISY PGND.
CONNECT ON A SINGLE POINT