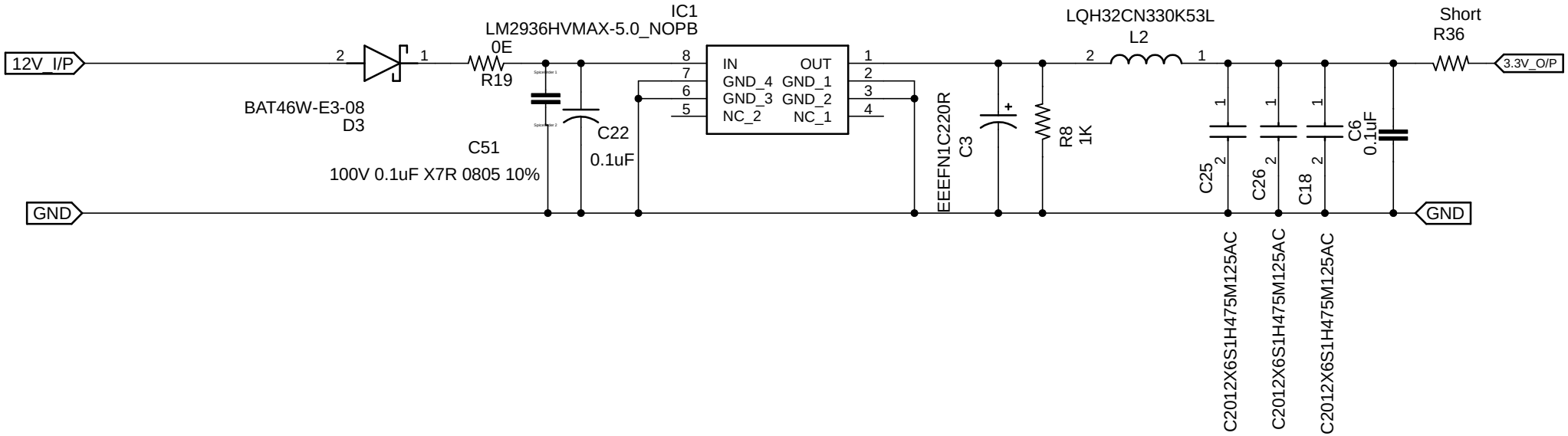
12V_I/P
GND
BAT46W-E3-08
D3
0E
R19
C51
100V 0.1uF X7R 0805 10%
C22
0.1uF
IC1
LM2936HVMAX-5.0_NOPB
IN
OUT
GND_4
GND_1
GND_3
GND_2
NC_2
NC_1
EEEFN1C220R
C3
R8
1K
LQH32CN330K53L
L2
C25
C26
C18
C6
0.1uF
C2012X6S1H475M125AC
C2012X6S1H475M125AC
C2012X6S1H475M125AC
Short
R36
3.3V_O/P
GND