12V to 5V 2A Regulator

Is the Enable enough ?

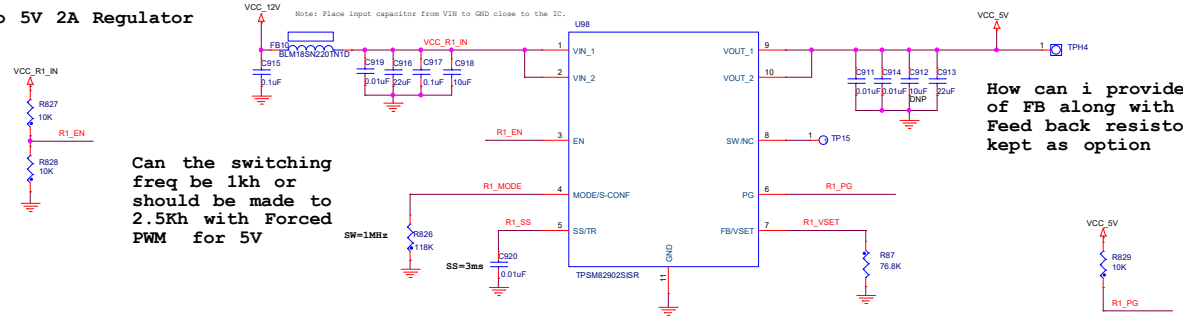

Is the Enable enough ?

Can the switching freq be 1kh or should be made to 2.5Kh with Forced PWM for 5V

How can i provide a option of FB along with VSET where Feed back resistor wil be kept as option

12V to 1.2V 2A Regulator

Is the Enable enough ?

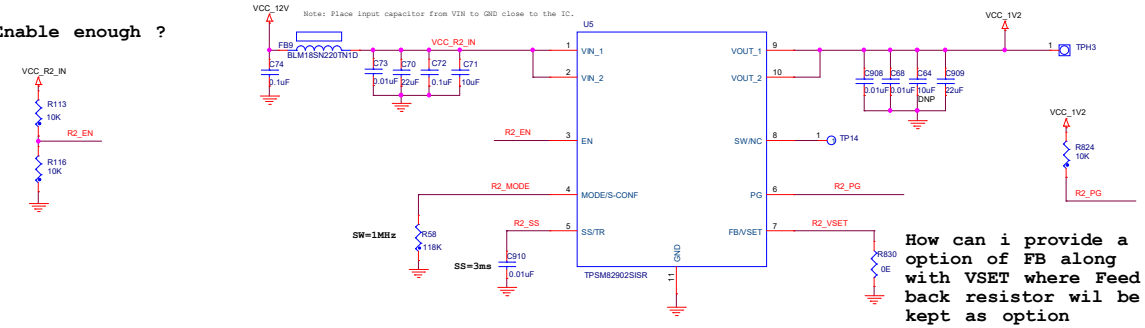

How can i provide a option of FB along with VSET where Feed back resistor wil be kept as option

Title	<Title>	
Size A2	Document Number <Doc>	Rev <Rev>
Date: Tuesday, June 10, 2025	Sheet 1 of 1	