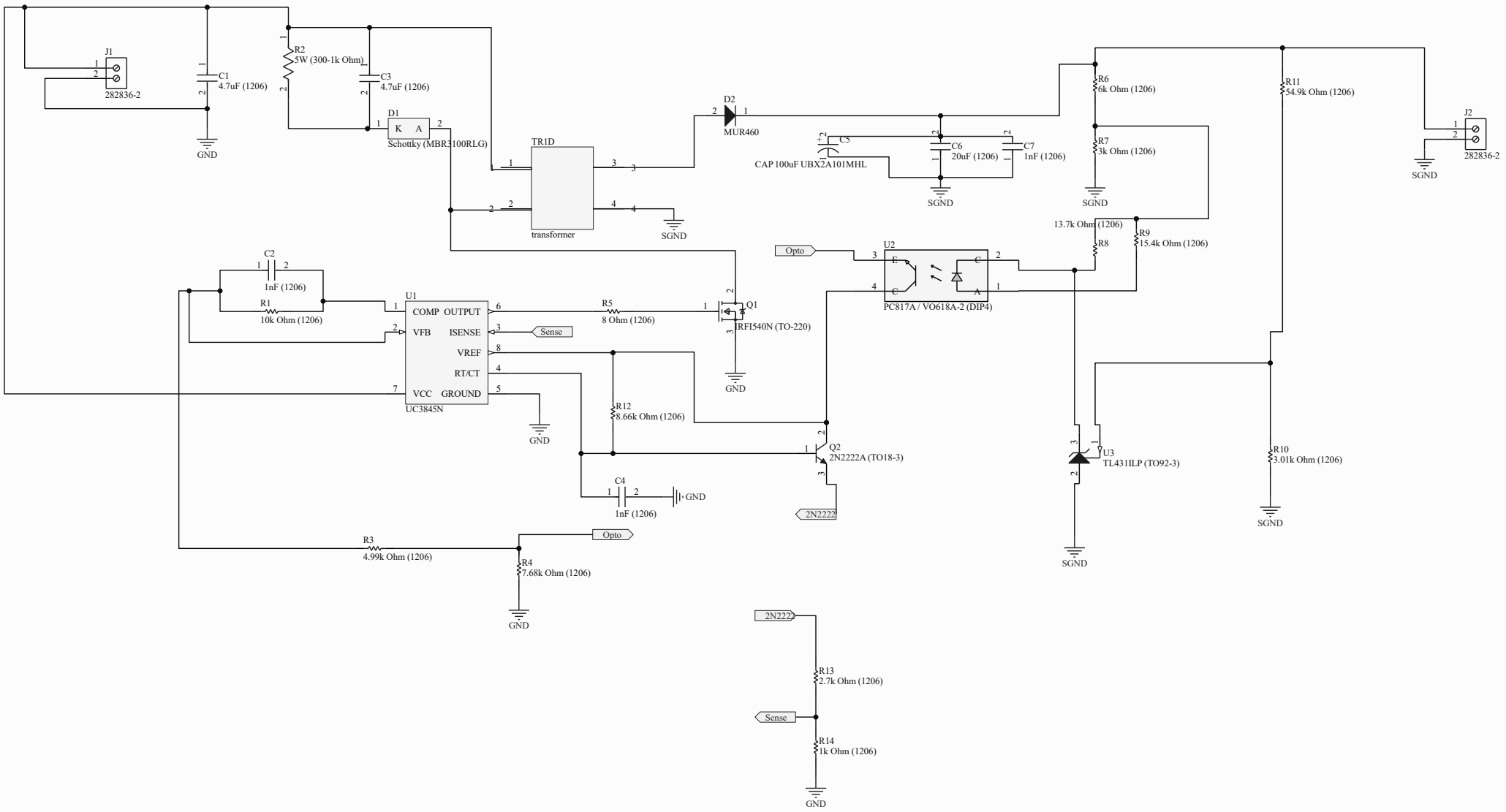

Title		
Size A3	Number	Revision
Date: 6.15.2023		Sheet of
File: C:\Users\..\Sheet3.SchDoc		Drawn By: