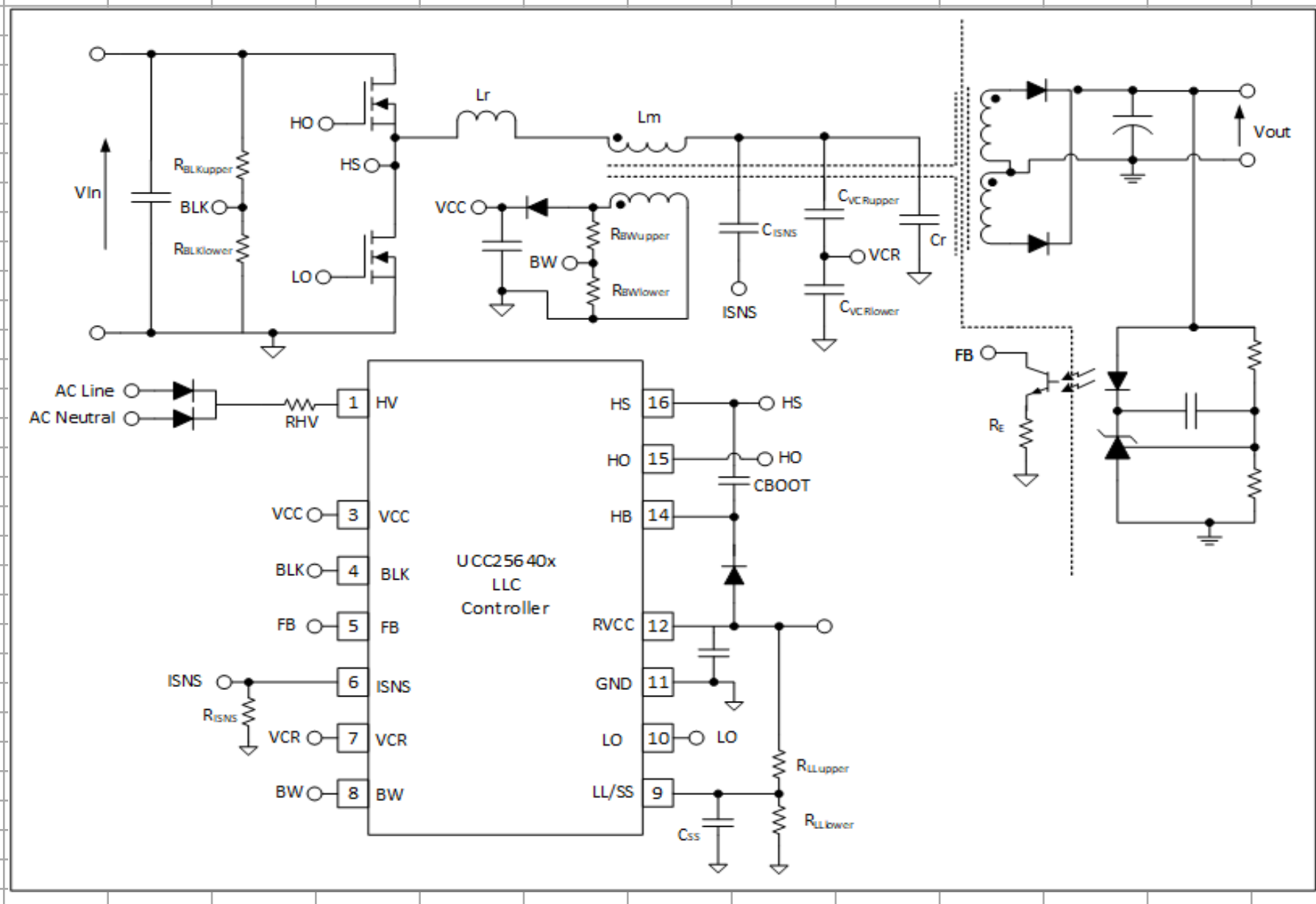

RefDes	Value	Unit
$R_{BLKupper}$	10	MΩ
$R_{BLKlower}$	38	kΩ
$R_{BWupper}$	23.00	KΩ
$R_{BWlower}$	5.600	KΩ
C_{ISNS}	150	pF
R_{ISNS}	220	Ω
$C_{VCRupper}$	110.0	pF
$C_{VCRlower}$	7200.0	pF
Lr	13	uH
Lm	80	uH
Cr	0.2	uF
C_{SS}	75	nF
$R_{LLupper}$	250.00	KΩ
$R_{LLlower}$	200.00	KΩ

Power stage Gain Calcuation for discrete Lr

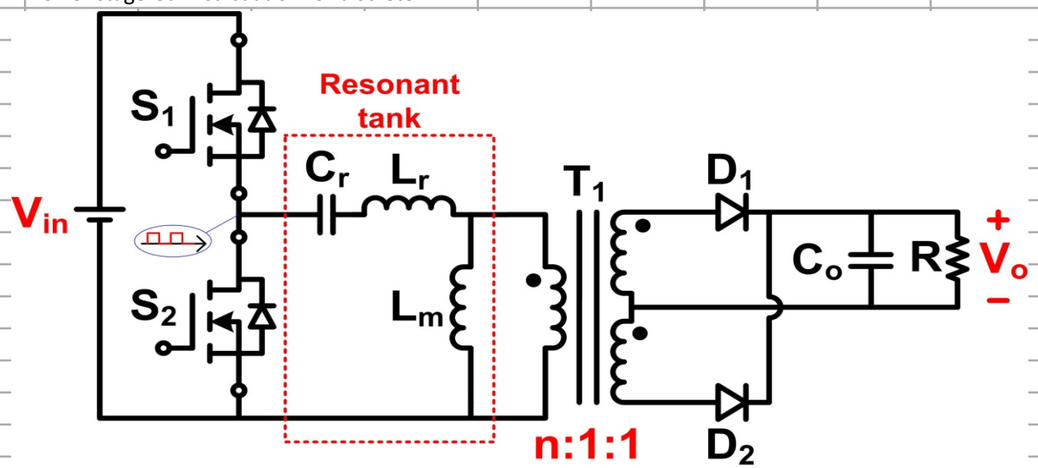

Power Stage Gain Calculation for Integrated Leakge

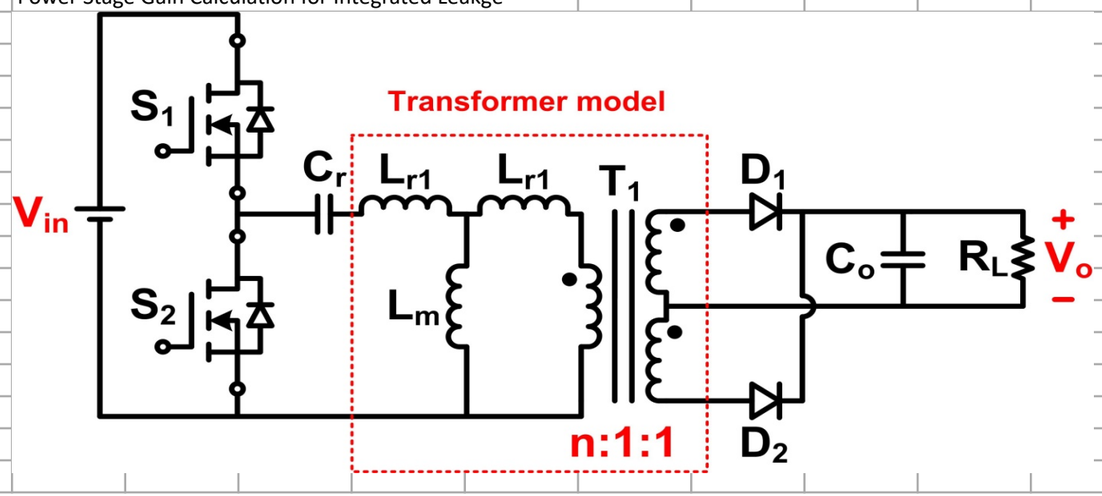

$$L_p = L_{r1} + L_m$$

$$L_{LK} = L_p \times (1 - k^2)$$

$$L_{r1} = L_p \times (1 - k)$$

NOTE: LLK is the primary inductance with the secondary windings completely shorted

UCC25640x DESIGN CALCULATOR TOOL

TI Literature Number: **Version: Original**

UCC25640x Enhanced LLC Resonant Controller

Please enter design parameters into the shaded cells;
Recommended Component Values will be in RED
Be sure to *ENABLE EDITING* before attempting to use this design calculator

This spreadsheet guides the user through the design process of an LLC resonant DC/DC CONVERTER using the UCC25640x. User interaction is required in order to get the best possible results. Enter the desired specification where prompted, the highlighted cells are for user inputs; calculations for the design are based upon the inputs.

WHERE APPLICABLE, A RECOMMENDED VALUE IS GIVEN THAT WILL BE THE BEST CHOICE TO MEET THE GIVEN SPECIFICATION. IT IS IN THE BEST INTEREST OF THE USER TO USE A VALUE AS CLOSE AS POSSIBLE TO THE SUGGESTED RECOMMENDED VALUE. FOR ACCURATE RESULTS, THE USER MUST ENTER THE ACTUAL VALUE USED IN THE APPROPRIATE CELL.

Disclaimer

This product is designed as an aid for customers of Texas Instruments. No warranties, either expressed or implied, with respect to this software or its fitness for any particular purpose, are claimed by Texas Instruments or the author. The software is licensed solely on an "as is" basis. The entire risk as to its quality and performance is with the customer.

Select Which Device You Are Using		UCC256404		Refer datasheet for the difference of UCC25640x devices
OUTPUT				
Output Voltage	V_{OUT}	24	V	Enter required nominal output voltage of converter
Maximum Output Power	P_{OUT}	600	W	Enter required maximum converter output power in Watts
Full Load Output Current	I_{OUT}	25	A	
Maximum Output Voltage Ripple	$V_{OUTpp(pk)}$	120	mV	Enter the desired maximum output voltage ripple
Target Efficiency	η	0.92		Enter the Overall Efficiency here
INPUT				
Nominal Input Voltage	V_{BLK}	315	V	Enter the nominal input voltage
Maximum DC Input Voltage	$V_{BLKDMAX}$	350	V	Enter the maximum input voltage
Minimum DC Input Voltage	$V_{BLKDMIN}$	260	V	Enter the minimum input voltage
LLC STAGE				
Nominal LLC Switching Frequency	f_{LLC}	100	kHz	Enter desired nominal LLC switching frequency
LLC Transformer				
Recommended Primary/Secondary Turns Ratio	$N_{PS(recommended)}$	6.5625		
Actual Primary/Secondary Turns Ratio	N_{PS}	6.00		Enter Actual Primary/Secondary Turns Ratio
Recommended Primary/Bias Turns Ratio	$N_{PB(recommended)}$	10.50		
Actual Primary/Bias Turns Ratio	N_{PB}	10.00		Enter Actual Primary/Bias Turns Ratio
LLC Effective Load Resistance at 110% Full Load	R_L	25.5	Ω	
LLC Effective Load Resistance at Full Load	$R_{L(full\ load)}$	28.0	Ω	
LLC Gain Range				
Minimum LLC Gain	$M_{G(min)}$	**0.840**		
Maximum LLC Gain Including Losses	$M_{G(max)}$	**1.177**		
Predicted Voltage Drop Due to Losses	V_{LOSS}	1.000	V	Enter the predicted voltage drop due to conversion losses in circuit
Select L_N and Q_E				

From the figure on the right, $M_{G(peak)}$ Vs Q_E with respect to L_N, select a point on an Ln curve that has an Ln and Q_E point that corresponds to an Attainable $M_{G(PEAK)}$ value that is greater than $M_{G(max)}$. Enter the selected values in the L_N and Q_E cells below.

For example, if $M_{G(max)}$, calculated above and shown by the horizontal line, was calculated to be 1.4, then using Ln = 5 and Q_E = 0.35 would result in an attainable $M_{G(PEAK)}$ = 1.52 (interpolated from Ln = 5 curve) which satisfies the requirement that the Attainable $M_{G(PEAK)} > M_{G(max)}$

Selected Primary Inductance Ratio	$L_{N(selected)}$	6.00		
Selected Quality Factor for Resonant Network	$Q_{E(selected)}$	0.30		
Gain Required at No-Load	$M_{G(noload)}$	0.857		
f_N at Maximum Switching Frequency	$f_{N(max)}$	3.50		

The selected L_N and Q_E values should result in an LLC Gain Curve, shown below, that intersects with the $M_{G(max)}$ and $M_{G(min)}$ traces. The Gain curve from an overload condition is also plotted, showing the minimum gain at maximum frequency.

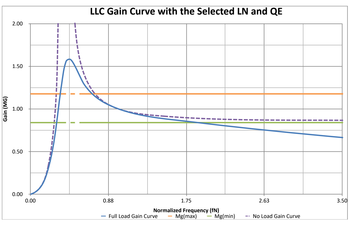

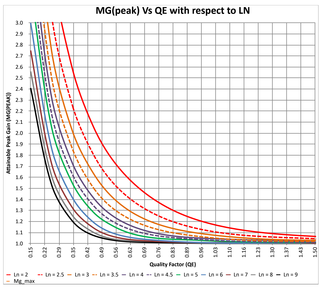

Parameters of the LLC Resonant Circuit				
Discrete resonant inductor or transformer leakage inductance used for L_R?		Discrete Inductor		
		0.9		Ignore this row
Recommended Resonant Capacitor Value	CR(recommended)	0.189	uF	
Actual Total Value of Resonant Capacitor Used	CR	0.2	uF	Enter actual value of Resonant Capacitor used
Recommended Resonant Inductor Value	$L_{R(recommended)}$	12.665	uH	
Actual Resonant Inductor Value Used	L_R	13	uH	Enter the actual value of the Resonant Inductor Value used
Recommended Transformer Magnetizing Inductance	$L_{M(recommended)}$	78	uH	
Actual Transformer Magnetizing Inductance Used	L_M	80	uH	Enter the actual value of the magnetizing inductance value used
Resultant Series Resonant Frequency	f_S	98.7	kHz	
No Load Resonant Frequency	f_P	36.9	kHz	
Resultant Inductance Ratio	L_N	**6.15**		Re-enter this value in the LN(selected) cell above to see the actual normalized frequency at MG(max) and MG(min)
Resultant Quality Factor at Full Load	Q_E	**0.29**		Re-enter this value in the $Q_{E(selected)}$ cell above to see the actual normalized frequency at $M_{G(max)}$ and $M_{G(min)}$
Gain Curve Graph Up to Date?		CAUTION. Update Cells C56 and C57 with new Ln and Qe		
f_N at $M_{G(max)}$	$f_{N(Mg\_max)}$	0.7		Enter f_N value at the second intersection of the $M_{G(max)}$ line and LLC Gain Curve shown in figure above
f_N at $M_{G(min)}$	$f_{N(Mg\_min)}$	1.1		Enter f_N value at the second intersection of the $M_{G(min)}$ line and LLC Gain Curve shown in figure above
Maximum Switching Frequency	$f_{SW(max)}$	108.6	kHz	
Minimum Switching Frequency	$f_{SW(min)}$	69.1	kHz	
LLC Primary Side Currents				
Primary Side RMS Load Current	I_{LR}	5.091	A	
RMS Magnetizing Current at $f_{SW(min)}$	I_M	3.733	A	
Total Current in Resonant Circuit	I_R	6.313	A	
LLC Secondary Side Currents				
Secondary RMS Current	$I_{S(RS)}$	30.545	A	
Current in Each Center Tapped Winding	I_{WS}	21.598	A	
LLC Resonant Inductor				
Terminal AC Voltage Across Resonant Inductor	V_{Lr}	35.627	V	
Inductance	L_R	13.000	uH	
Rated Current	I_R	6.313	A	
LLC Resonant Capacitor				
AC Voltage Across Resonant Capacitor	V_{CR}	72.7	V	
RMS Voltage Across Resonant Capacitor	$V_{CR(rms)}$	189.5	V	
Peak Voltage AC Voltage Rating for Resonant Capacitor	$V_{CR(peak)}$	277.8	V	
Valley Voltage on Resonant Capacitor	$V_{CR(valley)}$	72.2	V	
Rated Current of Resonant Capacitor	I_R	6.313	A	
If Using Split Resonant Capacitors				
Value of EACH Resonant Capacitor If Using Split Resonant Capacitors	$C_{R(split)}$	0.100	uF	
LLC Primary Side MOSFETs				
Minimum Voltage Rating of LLC MOSFETs	$V_{DS(CC)(peak)}$	525.0	V	
RMS Current Rating of LLC MOSFETs	$I_{DS(C)}$	6.944	A	
LLC Output Rectifier Diodes/Synchronous rectifiers				
Minimum Voltage Rating for LLC Output Diodes	V_{DR}	70.000	V	
Minimum Current Rating for LLC Output Diodes	I_{DAV}	13.750	A	
LLC Output Capacitors, C_{OUT}				
Rectifier's full wave output current	I_{RECT}	27.768	A	
C_{OUT} Minimum Voltage Rating	V_{COUT}	30	V	
C_{OUT} RMS Ripple Current Rating at resonant frequency	I_{COUT}	12.086	A	Use a combination of Capacitors that will meet this ripple current rating
C_{OUT} Maximum ESR	ESR_{COUT}	3.056	mΩ	
BLK				
BLK Pin Start Threshold	$V_{BLKpinstart}$	1.00	V	
BLK Pin Stop Threshold	$V_{BLKpinstop}$	0.90	V	
Desired Bulk Start Voltage	$V_{BLKStart}$	260	V	
Nominal Bulk Voltage	V_{BLK}	315	V	
Resistor Divider Ratio	R_{BLK}	260		
Resistor Divider Power Consumption Budget	P_{BLKrm}	10	mW	Enter the desired power consumption for resistor divider
Total BLK Sense Resistor Value	R_{BLKrm}	9.9225	MΩ	
Recommended Lower BLK Sense Resistor Value	$R_{BLKlower}$	38.16	kΩ	
Actual Lower BLK Sense Resistor Value	$R_{BLKlower}$	38	kΩ	Enter the actual value of the lower BLK sense resistor used
Recommended Upper BLK Sense Resistor Value	$R_{BLKupper}$	9.88	MΩ	
Actual Upper BLK Sense Resistor Value	$R_{BLKupper}$	10	MΩ	Enter the actual value of the upper BLK sense resistor used
Actual Bulk Start Voltage	$V_{BLKStart}$	264	V	
Actual Bulk Stop Voltage	$V_{BLKstop}$	238	V	
Actual Bulk Over-Voltage Threshold Rising Threshold	$V_{BLKOVRise}$	Not Applicable	V	BLK OVP Feature only present in UCC256402A
Actual Bulk Over-Voltage Threshold Falling Threshold	$V_{BLKOVFall}$	Not Applicable	V	BLK OVP Feature only present in UCC256402A
Actual BLK divider power consumption	P_{BLKrm}	9.885	mW	
VCR				
Peak Resonant Current at Full Load	$I_{res(peak)}$	8.93	A	
Peak to Peak Resonant Capacitor Voltage at Full Load	$V_{CR(pk-pk)}$	205.649	V	
Common Mode Voltage of VCR Pin	V_{CM}	3.02	V	
Set VCR pin voltage peak to peak at full load, minimum switching frequency	$V_{VCRpinpp(pk-pk)}$	5.25	V	Suggested range between 3V and 5.5V
Set Contribution of compensation ramp to total VCR capacitor peak to peak voltage	$V_{rampCR(pk-pk)}$	2	V	Suggested range between 1V and 2.0V
Compensation Ramp Current Source Value	I_{RAMP}	2	mA	
Required capacitor divider ratio	R_{CAPDIV}	63.28		
Recommended Capacitor Divider Value - Lower Cap	$C_{VCRlower}$	7237	pF	
Actual Capacitor Divider Value - Lower Cap	$C_{VCRlower}$	7200.0	pF	Enter the Capacitor divider value - lower cap
Recommended Capacitor Divider Value - Upper Cap	$C_{VCRupper}$	116	pF	
Actual Capacitor Divider Value - Upper Cap	$C_{VCRupper}$	110.0	pF	Enter the Capacitor divider value - upper cap
Actual capacitor divider ratio	R_{CAPDIV}	66.5		
Actual peak to peak VCR voltage at minimum switching frequency	$V_{VCRpinpp(pk-pk)}$	5.10	V	
Maximum VCR Voltage	V_{VCRmax}	5.57	V	
Minimum VCR Voltage	V_{VCRmin}	0.47	V	
BW				
Desired OVP Threshold Percentage of Nominal V_{OUT}	η_{OVP}	140	%	Enter the OVP threshold (percentage)
OVP Threshold Adjustment to Account for Rectifying Element, Transformer Leakage, Resistive Losses In Power Stage, etc.	V_{Drop}	0	V	Enter estimation for voltage drop within power stage (rectifying element, resistive losses, transformer leakage, etc).
OVP Threshold	V_{BWOVP}	-4	V	
BW Pin Voltage at Nominal V_{OUT}	$V_{BWpinNom}$	-2.86	V	
Bias Winding Nominal Voltage	$V_{BiasWindingNom}$	14.4	V	
Bias Winding Resistor Divider Ratio	R_{BW}	5.040		
Select Option for Burst Mode Threshold Entry to Burst Mode Threshold Exit Ratio	R_{BMT}	Option 6		Select Ratio between burst mode entry and burst exit, Note Option 5 forces Vssinit to be 0 V while option 6 allows programming an initial V_{SSINIT} voltage value
Ratio Between Burst Mode Entry and Burst Mode Exit	R_{BMT}	0.6		
Recommended Effective BW Programming Resistance	$R_{BWEProgram}$	4.591	KΩ	
Recommended Bias Winding Lower Resistor Value	$R_{BWLlower}$	5.727	KΩ	
Actual Bias Winding Lower Resistor Value	$R_{BWLlower}$	5.600	KΩ	Enter Bias winding lower resistor value
Recommended Bias Winding Upper Resistor Value	$R_{BWLupper}$	22.624	KΩ	
Actual Bias Winding Upper Resistor Value	$R_{BWLupper}$	23.000	KΩ	Enter Bias winding upper resistor value
Actual BW Programming Resistance	$R_{BWEProgram}$	4.503	KΩ	
Actual Option for Ratio Between Burst Mode Entry and Burst Mode Exit	R_{BMT}	Option 6		
Actual Ratio Between Burst Mode Entry and Burst Mode Exit	R_{BMT}	0.60		
Actual OVP Threshold Percentage of Nominal Vout	η_{OVP}	141.9	%	
BW Filter Capacitor Needed so That the Bandwidth is 50 Times the Resonant Frequency		7.16	pF	
Actual BW Filter Capacitor		7.00	pF	Enter the actual BW filter capacitor value
LL/SS				
SS Current Source Value	I_{SSCSP}	37.5	μA	
Required Soft Start Time at Full Load	T_{SS}	10	ms	Enter the required soft start time at full load
Recommended SS Capacitance Value	C_{SS}	75	nF	
Actual SS Capacitance Value	C_{SS}	75	nF	Enter the selected soft start capacitance
Target Burst Mode Threshold Exit Setting	V_{BMT_H}	2.00	V	Enter the desired burst mode threshold.
Minimum Soft Start Precharge Voltage Based on VBMT_H and Css	V_{ssInit_min}	0.322	V	$V_{ssInit\_min} = \frac{26 \times V_{BMT\_H}}{19 \times 98kΩ} \times \left(1.2kΩ + \frac{278pA}{C_{SS}}\right)$
Desired initial Soft Start Precharge Voltage	V_{ssInit}	0.60	V	Enter the desired initial soft start voltage. Note V_{ssInit} must satisfy the inequality above unless BW Option 5 is selected. This calculation is provided in Cell 202. It is recommended to limit the precharge voltage to less than 1V.
Recommended Upper LL/SS Resistance	R_{LLSS_Upper}	250.2	kΩ	
Recommended Lower LL/SS Resistance	R_{LLSS_Lower}	199.3	kΩ	
Actual Upper LL/SS Resistance	R_{LLSS_Upper}	250.0	kΩ	Enter the LL/SS divider value upper resistance
Actual Lower LL/SS Resistance	R_{LLSS_Lower}	200.0	kΩ	Enter the LL/SS divider value lower resistance
Actual initial Soft Start Precharge Voltage	V_{ssInit}	0.576	V	
Maximum attainable LL/SS Voltage at End of Soft Start	V_{ssInit_final}	9.944	V	Recommended to have >5V for max attainable LL/SS voltage
Actual Burst Mode Exit Threshold	V_{BMT_H}	2.050	V	
Actual Burst Mode Entry Threshold	V_{BMT_L}	1.230	V	
Burst Packet Size	N_{Burst}	40		Minimum number of switching cycles in each burst packet
Actual Soft Start Time at Full Load	T_{SS}	9.1	ms	
GNS				
OCP3 Threshold		0.43	V	
OCP2 Threshold		0.6	V	
OCP1 Threshold		4.7	V	
Desired OCP3 Threshold (Percentage of Full Load at Nominal Input Voltage)		130	%	Enter the desired OCP threshold (percentage)
Calculated OCP2 Level (Percentage of Full Load at Nominal Input Voltage)		181.4	%	
Sensed Average Input Current Level at Full Load		0.33	V	
Current Sense Ratio	K_{IGNS}	0.16		
Select a Current Sense Capacitor	C_{IGNS}	150	pF	Enter the current sense capacitor value such that the calculated R_{IGNS} < 500 Ω
Recommended Current Sense Resistor	R_{IGNS}	213	Ω	
Actual Current Sense Resistor	R_{IGNS}	220	Ω	Enter the actual current sense resistor value
Peak V_{CSS} at Full Load		1.47	V	
Ires peak at OCP1 Level		24.24	A	
Iac peak at OCP1 Level		145.45	A	

The Mg_max values were calculated in MathCad and imported here for graphing

Mg_max	Q	Ln	Mg_max	Q	Ln	Mg_max	Q	Ln	Mg_max
6.95E+00	1.50E-01	1.50E+00	5.81E+00	1.50E-01	2.00E+00	5.03E+00	1.50E-01	2.50E+00	4.47E+00
4.28E+00	2.50E-01	1.50E+00	3.53E+00	2.50E-01	2.00E+00	3.06E+00	2.50E-01	2.50E+00	2.74E+00
3.09E+00	3.50E-01	1.50E+00	2.57E+00	3.50E-01	2.00E+00	2.24E+00	3.50E-01	2.50E+00	2.01E+00
2.45E+00	4.50E-01	1.50E+00	2.05E+00	4.50E-01	2.00E+00	1.80E+00	4.50E-01	2.50E+00	1.63E+00
2.05E+00	5.50E-01	1.50E+00	1.73E+00	5.50E-01	2.00E+00	1.53E+00	5.50E-01	2.50E+00	1.40E+00
1.78E+00	6.50E-01	1.50E+00	1.52E+00	6.50E-01	2.00E+00	1.36E+00	6.50E-01	2.50E+00	1.26E+00
1.60E+00	7.50E-01	1.50E+00	1.38E+00	7.50E-01	2.00E+00	1.25E+00	7.50E-01	2.50E+00	1.17E+00
1.46E+00	8.50E-01	1.50E+00	1.28E+00	8.50E-01	2.00E+00	1.18E+00	8.50E-01	2.50E+00	1.12E+00
1.36E+00	9.50E-01	1.50E+00	1.21E+00	9.50E-01	2.00E+00	1.13E+00	9.50E-01	2.50E+00	1.09E+00
1.29E+00	1.05E+00	1.50E+00	1.16E+00	1.05E+00	2.00E+00	1.10E+00	1.05E+00	2.50E+00	1.07E+00
1.23E+00	1.15E+00	1.50E+00	1.13E+00	1.15E+00	2.00E+00	1.08E+00	1.15E+00	2.50E+00	1.05E+00
1.19E+00	1.25E+00	1.50E+00	1.11E+00	1.25E+00	2.00E+00	1.07E+00	1.25E+00	2.50E+00	1.04E+00
1.16E+00	1.35E+00	1.50E+00	1.09E+00	1.35E+00	2.00E+00	1.05E+00	1.35E+00	2.50E+00	1.04E+00
1.13E+00	1.45E+00	1.50E+00	1.07E+00	1.45E+00	2.00E+00	1.05E+00	1.45E+00	2.50E+00	1.03E+00
1.11E+00	1.55E+00	1.50E+00	1.06E+00	1.55E+00	2.00E+00	1.04E+00	1.55E+00	2.50E+00	1.03E+00

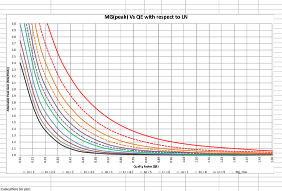

LLC Gain Curve Calacultions for plot:

Qe	Ln	fn	fn^2	Ln*fn^2	fn^2-1	real	imaginary	complex part	Imaginary product	Imaginary sum	Imaginary div
0.30	6.00	0.00	0.00	0.00	-1.00	1.00	0.00	1	-1	-1	0
0.30	6.00	0.05	0.00	0.02	-1.00	1.00	0.09	1+0.09j	-0.9975-0.089775j	-0.9825-0.089775j	-0.0151407620758167+0.00138347262873857j
0.30	6.00	0.10	0.01	0.06	-0.99	1.00	0.18	1+0.18j	-0.99-0.1782j	-0.93-0.1782j	-0.0622312763152982+0.0119243155262217j
0.30	6.00	0.15	0.02	0.14	-0.98	1.00	0.27	1+0.27j	-0.9775-0.263925j	-0.8425-0.263925j	-0.145917830930337+0.0457108172442601j
0.30	6.00	0.20	0.04	0.24	-0.96	1.00	0.36	1+0.36j	-0.96-0.3456j	-0.72-0.3456j	-0.270914607715648+0.130039011703511j
0.30	6.00	0.25	0.06	0.38	-0.94	1.00	0.45	1+0.45j	-0.9375-0.421875j	-0.5625-0.421875j	-0.426666666666667+0.32j
0.30	6.00	0.30	0.09	0.54	-0.91	1.00	0.54	1+0.54j	-0.91-0.4914j	-0.37-0.4914j	-0.528049023246737+0.701306189252558j
0.30	6.00	0.35	0.12	0.74	-0.88	1.00	0.63	1+0.63j	-0.8775-0.552825j	-0.1425-0.552825j	-0.321357829682456+1.2466992434681j
0.30	6.00	0.40	0.16	0.96	-0.84	1.00	0.72	1+0.72j	-0.84-0.6048j	0.12-0.6048j	0.303011938670384+1.52718017089873j
0.30	6.00	0.45	0.20	1.22	-0.80	1.00	0.81	1+0.81j	-0.7975-0.645975j	0.4175-0.645975j	0.857456248984774+1.32669533039027j
0.30	6.00	0.50	0.25	1.50	-0.75	1.00	0.90	1+0.9j	-0.75-0.675j	0.75-0.675j	1.10497237569061+0.994475138121547j
0.30	6.00	0.55	0.30	1.82	-0.70	1.00	0.99	1+0.99j	-0.6975-0.690525j	1.1175-0.690525j	1.17537438182383+0.726286706943085j
0.30	6.00	0.60	0.36	2.16	-0.64	1.00	1.08	1+1.08j	-0.64-0.6912j	1.52-0.6912j	1.17755186737231+0.53547621758404j
0.30	6.00	0.65	0.42	2.54	-0.58	1.00	1.17	1+1.17j	-0.5775-0.675675j	1.9575-0.675675j	1.15715150382061+0.399416777698081j
0.30	6.00	0.70	0.49	2.94	-0.51	1.00	1.26	1+1.26j	-0.51-0.6426j	2.43-0.6426j	1.13079880550722+0.299033461900798j
0.30	6.00	0.75	0.56	3.38	-0.44	1.00	1.35	1+1.35j	-0.4375-0.590625j	2.9375-0.590625j	1.10429327732098+0.222033435546452j
0.30	6.00	0.80	0.64	3.84	-0.36	1.00	1.44	1+1.44j	-0.36-0.5184j	3.48-0.5184j	1.07949353141419+0.160807312265838j
0.30	6.00	0.85	0.72	4.34	-0.28	1.00	1.53	1+1.53j	-0.2775-0.424574999999999j	4.0575-0.424574999999999j	1.05682028009086+0.110585205279008j
0.30	6.00	0.90	0.81	4.86	-0.19	1.00	1.62	1+1.62j	-0.19-0.307799999999999j	4.67-0.307799999999999j	1.03618390046611+0.0682949474439974j
0.30	6.00	0.95	0.90	5.42	-0.10	1.00	1.71	1+1.71j	-0.0974999999999995-0.166724999999999j	5.3175-0.166724999999999j	1.01733556735267+0.031897559467207j
0.30	6.00	1.00	1.00	6.00	0.00	1.00	1.80	1+1.8j	0	6	1
0.30	6.00	1.05	1.10	6.62	0.10	1.00	1.89	1+1.89j	0.1025+0.193725000000001j	6.7175+0.193725000000001j	0.983923038621302-0.0283752126024433j
0.30	6.00	1.10	1.21	7.26	0.21	1.00	1.98	1+1.98j	0.210000000000001+0.415800000000001j	7.47+0.415800000000001j	0.968885622159923-0.0539307418599862j
0.30	6.00	1.15	1.32	7.94	0.32	1.00	2.07	1+2.07j	0.322500000000001+0.667575000000002j	8.25750000000001+0.667575000000002j	0.954704775858503-0.0771828084461085j
0.30	6.00	1.20	1.44	8.64	0.44	1.00	2.16	1+2.16j	0.440000000000001+0.950400000000002j	9.08000000000001+0.950400000000002j	0.941229992412724-0.0985181701309531j
0.30	6.00	1.25	1.56	9.38	0.56	1.00	2.25	1+2.25j	0.562500000000001+1.265625j	9.93750000000001+1.265625j	0.928338405622578-0.118231778074573j
0.30	6.00	1.30	1.69	10.14	0.69	1.00	2.34	1+2.34j	0.690000000000001+1.6146j	10.83+1.6146j	0.915930079517036-0.136552235123565j
0.30	6.00	1.35	1.82	10.94	0.82	1.00	2.43	1+2.43j	0.822500000000001+1.998675j	11.7575+1.998675j	0.903923866483807-0.153659369240444j
0.30	6.00	1.40	1.96	11.76	0.96	1.00	2.52	1+2.52j	0.960000000000002+2.4192j	12.72+2.4192j	0.892253930315003-0.169696596558023j
0.30	6.00	1.45	2.10	12.62	1.10	1.00	2.61	1+2.61j	1.1025+2.877525j	13.7175+2.877525j	0.880866891968785-0.184779770607799j
0.30	6.00	1.50	2.25	13.50	1.25	1.00	2.70	1+2.7j	1.25+3.375j	14.75+3.375j	0.869719511362862-0.199003617006756j
0.30	6.00	1.55	2.40	14.42	1.40	1.00	2.79	1+2.79j	1.4025+3.91297500000001j	15.8175+3.91297500000001j	0.858776812683581-0.212446480076532j
0.30	6.00	1.60	2.56	15.36	1.56	1.00	2.88	1+2.88j	1.56+4.49280000000001j	16.92+4.49280000000001j	0.848010569459396-0.225173870358581j
0.30	6.00	1.65	2.72	16.34	1.72	1.00	2.97	1+2.97j	1.7225+5.11582500000001j	18.0575+5.11582500000001j	0.837398078651479-0.237241147762271j
0.30	6.00	1.70	2.89	17.34	1.89	1.00	3.06	1+3.06j	1.89+5.78340000000001j	19.23+5.78340000000001j	0.826921166006367-0.248695573139949j
0.30	6.00	1.75	3.06	18.38	2.06	1.00	3.15	1+3.15j	2.0625+6.49687500000001j	20.4375+6.49687500000001j	0.816565376351443-0.259577892574106j
0.30	6.00	1.80	3.24	19.44	2.24	1.00	3.24	1+3.24j	2.24+7.25760000000001j	21.68+7.25760000000001j	0.806319311201765-0.269923571904895j
0.30	6.00	1.85	3.42	20.54	2.42	1.00	3.33	1+3.33j	2.4225+8.06692500000001j	22.9575+8.06692500000001j	0.796174090240676-0.279763766652065j
0.30	6.00	1.90	3.61	21.66	2.61	1.00	3.42	1+3.42j	2.61+8.92620000000001j	24.27+8.92620000000001j	0.786122896479405-0.289126089763266j
0.30	6.00	1.95	3.80	22.82	2.80	1.00	3.51	1+3.51j	2.8025+9.83677500000001j	25.6175+9.83677500000001j	0.776160615383769-0.298035223475815j
0.30	6.00	2.00	4.00	24.00	3.00	1.00	3.60	1+3.6j	3+10.8j	27+10.8j	0.766283524904215-0.306513409961686j
0.30	6.00	2.05	4.20	25.22	3.20	1.00	3.69	1+3.69j	3.2025+11.817225j	28.4175+11.817225j	0.756489041981681-0.314580846982739j
0.30	6.00	2.10	4.41	26.46	3.41	1.00	3.78	1+3.78j	3.41+12.8898j	29.87+12.8898j	0.746775510568301-0.322256008574599j
0.30	6.00	2.15	4.62	27.74	3.62	1.00	3.87	1+3.87j	3.6225+14.019075j	31.3575+14.019075j	0.737142024545796-0.329555906171071j
0.30	6.00	2.20	4.84	29.04	3.84	1.00	3.96	1+3.96j	3.84+15.2064j	32.88+15.2064j	0.727588279540813-0.336496302212924j
0.30	6.00	2.25	5.06	30.38	4.06	1.00	4.05	1+4.05j	4.0625+16.453125j	34.4375+16.453125j	0.718114448769573-0.343091885006516j
0.30	6.00	2.30	5.29	31.74	4.29	1.00	4.14	1+4.14j	4.29+17.7606j	36.03+17.7606j	0.708721078944238-0.349356413952181j
0.30	6.00	2.35	5.52	33.14	4.52	1.00	4.23	1+4.23j	4.5225+19.130175j	37.6575+19.130175j	0.699409002991234-0.355302838048141j
0.30	6.00	2.40	5.76	34.56	4.76	1.00	4.32	1+4.32j	4.76+20.5632j	39.32+20.5632j	0.690179266906904-0.360943395250764j
0.30	6.00	2.45	6.00	36.02	5.00	1.00	4.41	1+4.41j	5.0025+22.061025j	41.0175+22.061025j	0.681033068538712-0.366289694663479j
0.30	6.00	2.50	6.25	37.50	5.25	1.00	4.50	1+4.5j	5.25+23.625j	42.75+23.625j	0.671971706454465-0.371352785145888j
0.30	6.00	2.55	6.50	39.02	5.50	1.00	4.59	1+4.59j	5.50249999999999+25.256475j	44.5175+25.256475j	0.662996537366047-0.376143212693259j
0.30	6.00	2.60	6.76	40.56	5.76	1.00	4.68	1+4.68j	5.75999999999999+26.9568j	46.32+26.9568j	0.654108940822330-0.380671068565617j
0.30	6.00	2.65	7.02	42.14	6.02	1.00	4.77	1+4.77j	6.02249999999999+28.727325j	48.1574999999999+28.727325j	0.645310290089447-0.384946029782357j
0.30	6.00	2.70	7.29	43.74	6.29	1.00	4.86	1+4.86j	6.28999999999999+30.5694j	50.0299999999999+30.5694j	0.636601928304352-0.388977393306158j
0.30	6.00	2.75	7.56	45.38	6.56	1.00	4.95	1+4.95j	6.56249999999999+32.484375j	51.9374999999999+32.484375j	0.627985149126448-0.392774105004178j
0.30	6.00	2.80	7.84	47.04	6.84	1.00	5.04	1+5.04j	6.83999999999999+34.4735999999999j	53.8799999999999+34.4735999999999j	0.619461181227583-0.396344784282984j
0.30	6.00	2.85	8.12	48.74	7.12	1.00	5.13	1+5.13j	7.12249999999999+36.5384249999999j	55.8574999999999+36.5384249999999j	0.611031176057236-0.399697745137 7j
0.30	6.00	2.90	8.41	50.46	7.41	1.00	5.22	1+5.22j	7.40999999999999+38.6801999999999j	57.8699999999999+38.6801999999999j	0.602696198940078-0.402841014228129j
0.30	6.00	2.95	8.70	52.22	7.70	1.00	5.31	1+5.31j	7.70249999999999+40.9002749999999j	59.9174999999999+40.9002749999999j	0.594457219316965-0.405782346489743j
0.30	6.00	3.00	9.00	54.00	8.00	1.00	5.40	1+5.4j	7.99999999999999+43.1999999999999j	61.9999999999999+43.1999999999999j	0.586315111098658-0.408529238701j
0.30	6.00	3.05	9.30	55.82	8.30	1.00	5.49	1+5.48999999999999j	8.30249999999999+45.5807249999999j	64.1174999999999+45.5807249999999j	0.578270643950012-0.411088941357014j
0.30	6.00	3.10	9.61	57.66	8.61	1.00	5.58	1+5.57999999999999j	8.60999999999999+48.0437999999999j	66.2699999999999+48.0437999999999j	0.570324484115186-0.413468469140382j
0.30	6.00	3.15	9.92	59.54	8.92	1.00	5.67	1+5.66999999999999j	8.92249999999998+50.5905749999999j	68.4574999999998+50.5905749999999j	0.562477193229696-0.415674610230382j
0.30	6.00	3.20	10.24	61.44	9.24	1.00	5.76	1+5.75999999999999j	9.23999999999998+53.2223999999999j	70.6799999999998+53.2223999999999j	0.554729228696305-0.417713934654303j
0.30	6.00	3.25	10.56	63.38	9.56	1.00	5.85	1+5.84999999999999j	9.56249999999998+55.9406249999998j	72.9374999999998+55.9406249999998j	0.547080944914004-0.419592801838286j
0.30	6.00	3.30	10.89	65.34	9.89	1.00	5.94	1+5.93999999999999j	9.88999999999998+58.7465999999998j	75.2299999999998+58.7465999999998j	0.539532595211646-0.421317367511106j
0.30	6.00	3.35	11.22	67.34	10.22	1.00	6.03	1+6.02999999999999j	10.2225+61.6416749999997j	77.5574999999998+61.6416749999997j	0.532084334357691-0.422893590059866j
0.30	6.00	3.40	11.56	69.36	10.56	1.00	6.12	1+6.11999999999999j	10.56+64.6271999999997j	79.9199999999998+64.6271999999997j	0.524736221534889-0.424327236441185j
0.30	6.00	3.45	11.90	71.42	10.90	1.00	6.21	1+6.20999999999999j	10.9025+67.7045249999997j	82.3174999999998+67.7045249999997j	0.517488223683776-0.425623887722583j
0.30	6.00	3.50	12.25	73.50	11.25	1.00	6.30	1+6.29999999999999j	11.25+70.8749999999997j	84.7499999999998+70.8749999999997j	0.510340219131998-0.426788944318352j
0.30	6.00	3.55	12.60	75.62	11.60	1.00	6.39	1+6.38999999999999j	11.6025+74.1399749999997j	87.2174999999998+74.1399749999997j	0.503292001437981-0.427827630972135j

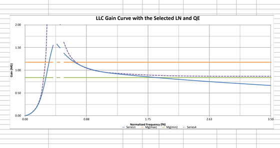

0.219223536063534-1.77821614439113i	9087.32897274744-146.356534592788i	0.999445142789879-0.0235488713869101i	2.91832634262473-4.32509730553617i
0.219223265222262-1.52431077526494i	9086.36487219576-170.728762893155i	0.999244928976108-0.0274681796200717i	2.9181778892269-3.71414487598116i
0.21922295271933-1.3338986434775i	9085.25273648798-195.091523987054i	0.99901401269036-0.0313849508310129i	2.91800666840751-3.25685962109388i
0.219222598538902-1.18581533645409i	9083.99268888995-219.443470418022i	0.998752436551696-0.0352988248210393i	2.91781271077207-2.90201828080481i
0.219222202697576-1.0673622066345i	9082.58486904092-243.783256726274i	0.998460248802205-0.0392094422817305i	2.91759605096414-2.61888679593872i
0.219215952760852-0.534694787000647i	9060.42149728916-486.218231324883i	0.993869314400304-0.0780583134187082i	2.91419130479327-1.36505504441722i
0.219205536991531-0.357589420912823i	9023.75369037241-725.98138393078i	0.986310862151039-0.116197010950857i	2.90858358864393-0.971258179633568i
0.219190956577209-0.269374471902931i	8972.980380443-961.797711796567i	0.975920135830733-0.153297176460809i	2.90087002505139-0.791849820198368i
0.219172213180043-0.216715581889345i	8908.6449043969-1192.4627110158i	0.962878026529877-0.189060658403081i	2.89118051924181-0.697533117070105i
0.219149308936283-0.181834605880466i	8831.42074883654-1416.86173668199i	0.947403452760766-0.223226679538412i	2.87967228887516-0.645092693867474i
0.21912224645566-0.157112316938613i	8742.09444490651-1633.9861546392i	0.929744629286025-0.25557690349446i	2.86652359600747-0.615930683577322i
0.219091028820639-0.138739082426451i	8641.54639735419-1842.94586884037i	0.910169837646276-0.285938287546855i	2.8519271213229-0.600701876587406i
0.219055659585553-0.124598422760642i	8530.73047772864-2042.97801166263i	0.888958282393729-0.314183791048043i	2.8360833998877-0.594191929438741i
0.219016142775582-0.113420434917639i	8410.6532027699-2233.45178378058i	0.8663915357188-0.34023116046832i	2.81919467929978-0.593267572835999i
0.218394077568986-0.0667995572021568i	6923.11404816935-3561.97697118605i	0.618486458158835-0.485758128324143i	2.6304098873618-0.658670128151338i
0.217365117821916-0.0556589067420397i	5445.15627350507-3994.3186384986i	0.418775705063893-0.493358504448978i	2.46922486662643-0.70944920709062i
0.21594075646524-0.0532951126052341i	4302.19861231674-3935.14902598652i	0.288400439142003-0.453018350450291i	2.35112617957281-0.744891671648535i
0.21413663499512-0.054340582961 9523i	3489.29095945049-3682.62974023103i	0.205959893604952-0.404401305427157i	2.26115699133676-0.779858189787079i
0.211972122581602-0.0569859691598898i	2920.25464460104-3380.65644470842i	0.152633248439582-0.359633618993501i	2.18633831174 08-0.818129518894174i
0.20946981197312-0.060440897519404i	2517.61694634858-3086.80984118401i	0.116871364744525-0.321266943284362i	2.11892827276891-0.859167202008437i
0.206654955860219-0.0642993957317733i	2226.92264199524-2820.42110707634i	0.0919996683503754-0.289025482222237i	2.05477106698839-0.901428106434158i
0.203554868633623-0.0683284927526649i	2012.3005134162-2585.44116001923i	0.0741222916123583-0.261969802646204i	1.99172660324149-0.943408480527041i
0.200198318076047-0.0723836914125539i	1850.35934537329-2380.13756743004i	0.0608966784642876-0.239140697114282i	1.92878084400006-0.983899918107554i
0.158841786002943-0.103268431611915i	1278.92173758001-1284.00301212744i	0.015952772771638-0.125292784359414i	1.31050553792073-1.21026126662312i
0.118159797187301-0.112833979234188i	1163.05361507787-868.699787085853i	0.00715352039034163-0.0842754266460075i	0.843583764612397-1.16767717043488i
0.0869741033834978-0.109915683634803i	1121.68341651443-654.925104515006i	0.00403648807570998-0.0634050064247661i	0.554621998314176-1.03661704049169i
0.0649382178103279-0.102228638940344i	1102.38838044097-525.208788577186i	0.00258711179297941-0.0507978212677476i	0.381592805904416-0.903063314178689i
0.0495838762068556-0.0934916541188807i	1091.86790796596-438.250450302672i	0.00179802676342129-0.0423650075319162i	0.274899445420874-0.788984851508583i
0.0387544961570726-0.0851540701570526i	1085.5109913798-375.941804422536i	0.00132162970848571-0.0363301941007663i	0.206080335052268-0.6957470486836i
0.0309539199715364-0.0776727701293295i	1081.37969761375-329.118856762776i	0.00101218627730655-0.0317987697285065i	0.159665410339276-0.619956327708225i
0.0252043242550911-0.0711147575797923i	1078.54483122166-292.653650868779i	0.000799922051107538-0.0282715789410441i	0.127095636631 03-0.557888432578767i
0.0208714262992654-0.0654087961983113i	1076.51583644922-263.454991947475i	0.000648035353173199-0.0254482888099423i	0.103451348090686-0.506472088758088i

Type II no inner loop	with opto, bias resistors, etc	Gain	Phase
0.219224265254903-10.6669315003433i	0.429187782987558-25.8182413029 02i	28.2397330669727	90.952364
0.219224202752596-5.33356712330867i	0.429165850269653-12.911893951442i	22.2245942991786	91.903697
0.219224098582163-3.55582405227236i	0.429129300251553-8.61101036244347i	18.7118546674526	92.852972
0.219223952743723-2.66698630763934i	0.429078139698677-6.46149228337864i	16.2257654977706	93.79917
0.219223765237442-2.13371069345968i	0.42901237807823 5-5.17251992614664i	14.3038169609422	94.741299
0.219223536063534-1.77821614439113i	0.428932027554851-4.31381991357053i	12.7399668989826	95.678373
0.219223265222262-1.52431077526494i	0.428837102984941-3.70098927179861i	11.4242772649274	96.609441
0.21922295271933-1.3338986434775i	0.42872762190985-3.24182642844468i	10.2910955657634	97.533580
0.219222598538902-1.18581533645409i	0.428603604547768-2.8851082120026i	9.29804532887644	98.449901
0.219222202697576-1.0673622066345i	0.428465073784419-2.60010065164376i	8.41616323984623	99.35755
0.219215952760852-0.534694787000647i	0.426288446534413-1.3275714099195i	2.88733720913787	107.80203
0.219205536991531-0.357589420912823i	0.422704902866333-0.91525169205897i	0.0704974155243462	114.78964
0.219190956577209-0.269374471902931i	0.417778601493054-0.717575926410687i	-1.61494597312269	120.20831
0.219172213180043-0.216715581889345i	0.411595355882633-0.605320717731358i	-2.7097791220848	124.21423
0.219149308936283-0.181834605880466i	0.404259019420347-0.535335042023066i	-3.46778837094381	127.05833
0.21912224645566-0.157112316938613i	0.39588743433 8559-0.489075049317209i	-4.02391251096771	128.98883
0.219091028820639-0.138739082426451i	0.386607598537414-0.457238516826493i	-4.45471474812873	130.21542
0.219055659585553-0.124598422760642i	0.376552237358589-0.434642884954731i	-4.8055789290712	130.90397
0.219016142775582-0.113420434917639i	0.365854835430284-0.418175760899496i	-5.10434210864079	131.18212
0.218394077568986-0.0667995572021568i	0.248378188785517-0.356746868838904i	-7.23629997709971	124.84682
0.217365117821916-0.0556589067420397i	0.153848577651246-0.315956612789363i	-9.08340195097676	115.96281
0.21594075646524-0.0532951126052341i	0.0922928921740824-0.273960407228113i	-10.7793773544945	108.61785
0.21413663499512-0.0543405829619523i	0.0535554927620115-0.236673326641998i	-12.3001409595464	102.75041
0.211972122581602-0.0569859691598898i	0.0287038848408888-0.205551772659886i	-13.6577023486166	97.949553
0.20946981197312-0.060440897519404i	0.0122545576301888-0.179968074852968i	-14.8760004042833	93.895425
0.206654955860219-0.0642993957317733i	0.00103592056884516-0.15887454012964 7i	-15.9787292331932	90.373584
0.203554868633623-0.0683284927526649i	-0.00680583778329 3-0.141317673381204i	-16.9860091888174	87.242774
0.200198318076047-0.0723836914125539i	-0.0123879454368504-0.126538703851712i	-17.9141073008332	84.408648
0.158841786002943-0.103268431611915i	-0.0251821884615501-0.0521541522803326i	-24.7441127641044	64.226821
0.118159797187301-0.112833979234188i	-0.0209686700633508-0.0260542139509235i	-29.5136122027768	51.172570
0.0869741033834978-0.109915683634803i	-0.0160174877127142-0.0144204480157509i	-33.3300564859713	41.996517
0.0649382178103279-0.102228638940344i	-0.0121616912436677-0.0086237988758497i	-36.5310617489136	35.340276
0.0495838762068556-0.0934916541188807i	-0.00937026104270616-0.00549085580583068i	-39.2829730687805	30.369769
0.0387544961570726-0.0851540701570526i	-0.00736345277051518-0.00367997924805297i	-41.6900940063855	26.554174
0.0309539199715364-0.0776727701293295i	-0.00590192329668 45-0.00257251369407322i	-43.8246996122678	23.55128
0.0252043242550911-0.0711147575797923i	-0.00481716498754442-0.00186226080558591i	-45.7392660735831	21.135930
0.0208714262992654-0.0654087961983113i	-0.00399585955044539-0.00138807970594621i	-47.4730084771981	19.156179

Type II No Inner Loop

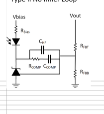

Type II with Inner Loop

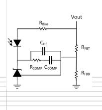

Type III with Inner Loop

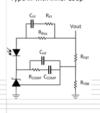

Power Stage				
Nominal Input Voltage	V_{BLK}	315	V	
Output Voltage	V_{OUT}	24	V	
Output Power	P_{OUT}	600	W	
Transformer Pri:Sec Turns Ratio	N_{PS}	6.00		
Output Load Resistance (RL)	R_L	0.96	Ω	
Equivalent Load Resistance (Re)	Re	28.01	Ω	
Efficiency	η	0.92		
Magnetizing Inductance (Lm)	L_M	80.00	uH	
Resonant Inductance (Lr)	L_R	13.00	uH	
Resonant Capacitance (Cr)	C_R	0.20	uF	
Resultant Inductance Ratio	L_N	6.15		
Resultant Quality Factor at Full Load	Q_E	0.29		
Resultant Series Resonant Frequency	f_0	98.70	kHz	
Power Stage Gain at Nominal Input Voltage	$M_{G(nom)}$	0.93		
Actual Capacitor Divider Value - Lower Cap	$C_{VCRlower}$	7200.00	pF	
Actual Capacitor Divider Value - Upper Cap	$C_{VCRupper}$	110.00	pF	
Output Capacitance	C_{OUT}	1.968	mF	Enter the total output capacitance
Effective Output Capacitance ESR	R_{ESR}	0	mΩ	Enter the effective equivalent series resistance of theoutput capacitance
f_N at $M_{G(nom)}$	$f_{N(Mg\_nom)}$	0.8		Enter f_N value at the second intersection of the $M_{G(nom)}$ line and LLC Gain Curve shown in figure to the right
Nominal Switching Frequency	$f_{SW(nom)}$	79.0	kHz	

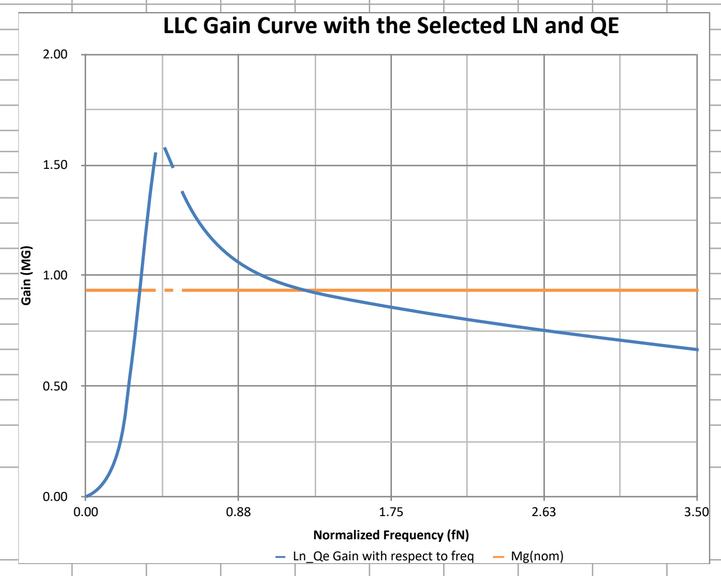

Compensation				
Compensation Network Type		Type II with Inner Loop		
Top Feedback Resistor	R_{FBT}	147	kΩ	
Compensation Resistor	R_{COMP}	33.2	kΩ	
Compensation Capacitor	C_{COMP}	10.00	nF	
High Frequency Capacitor	C_{HF}	150.00	pF	
Feedforward Resistor	R_{FF}	1.21	kΩ	
Feedforward Capacitor	C_{FF}	4.70	nF	
Opto-coupler Bias Resistor	R_{Bias}	9.09	kΩ	
Opto-coupler Current Transfer Ratio	CTR	0.22		
Opto-coupler Parasitic Pole	$Opto_{Pole}$	16.00	kHz	

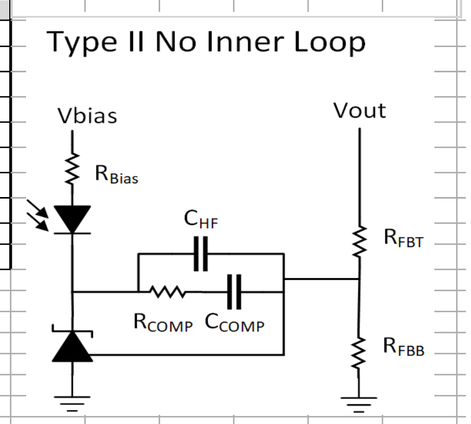

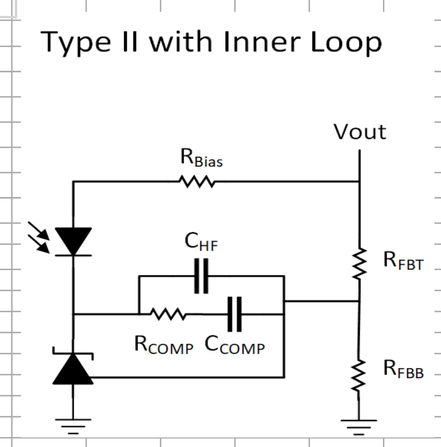

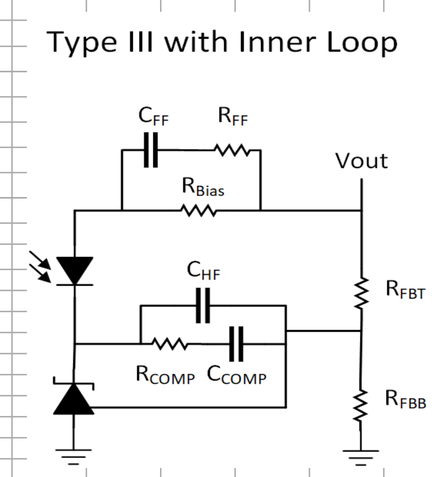

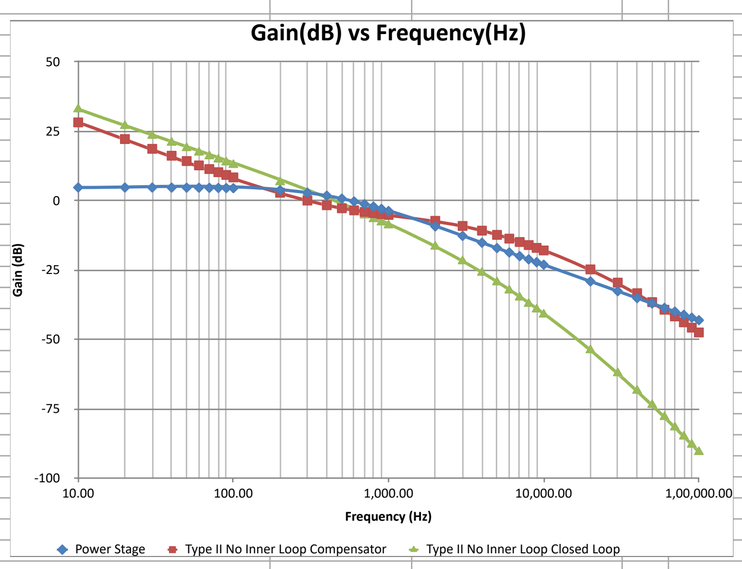

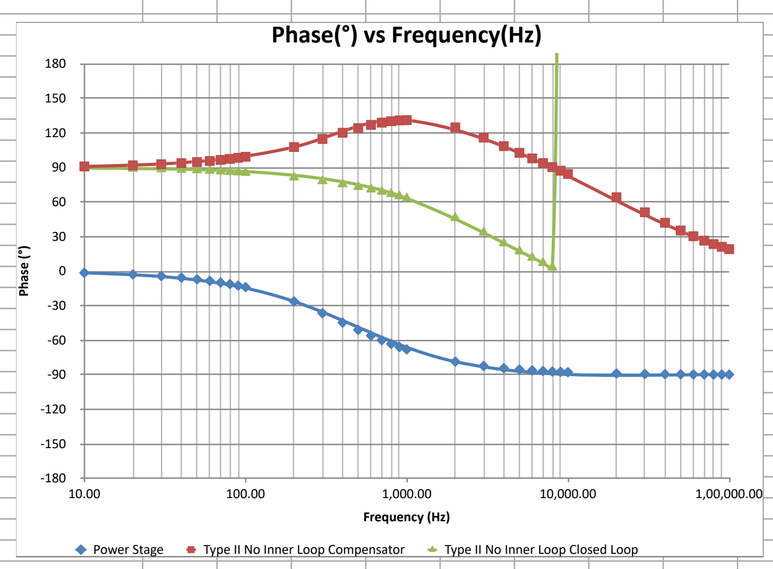

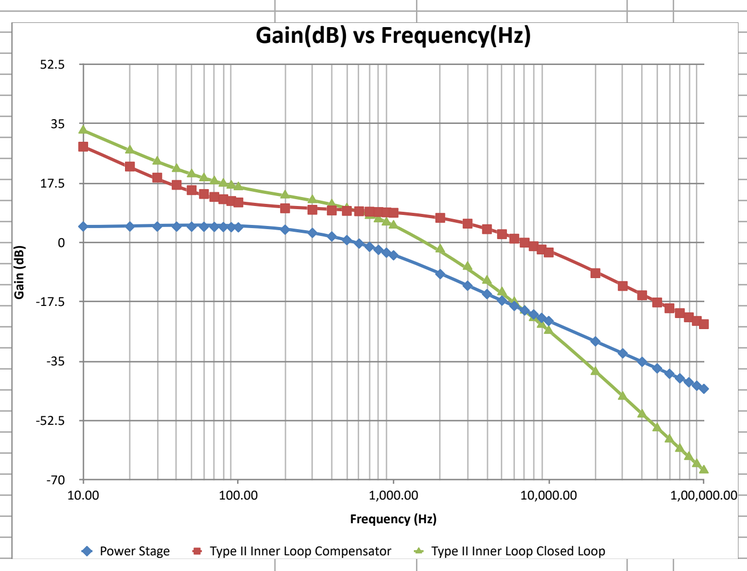

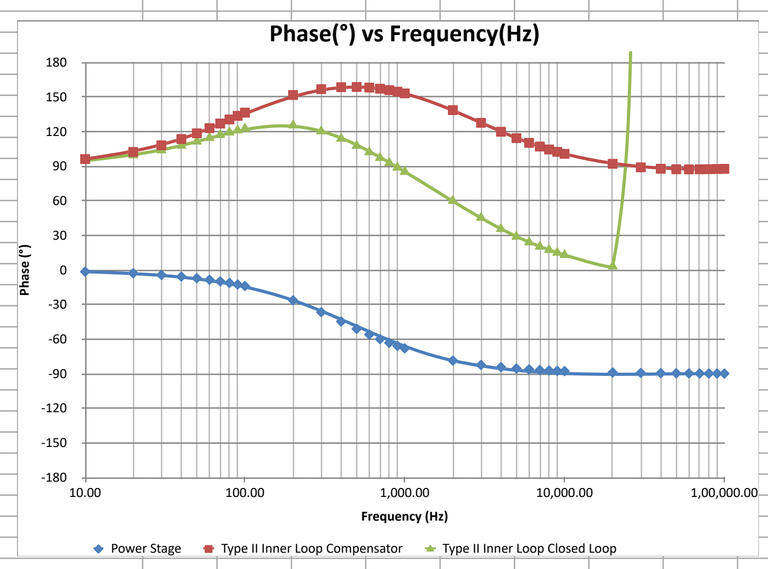

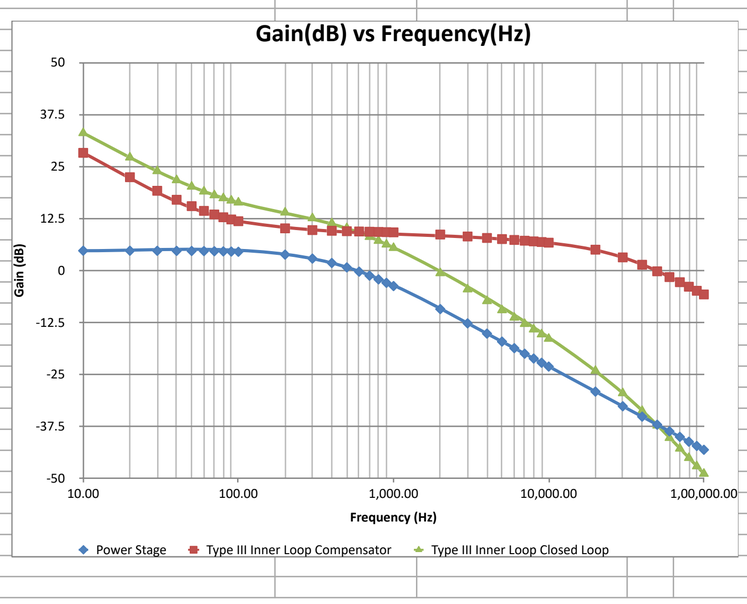

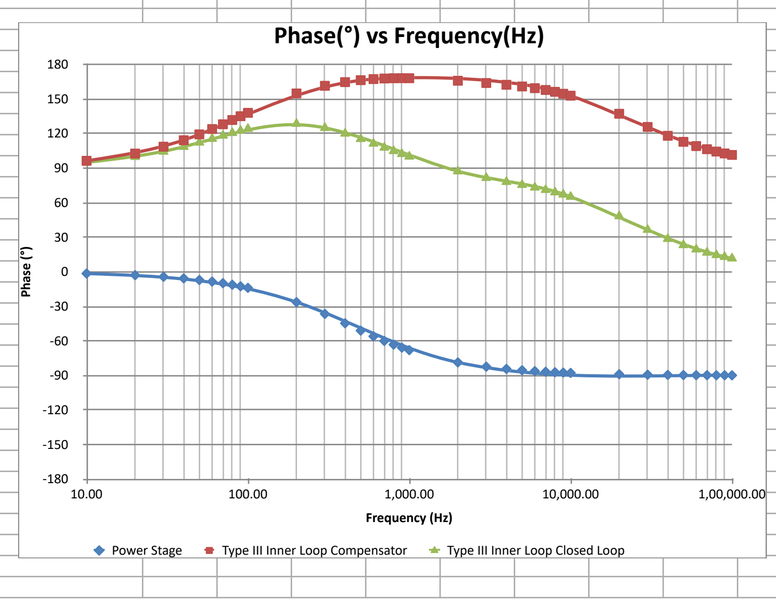

Rev 3.0	Corrected broken cell reference on schematic p			
	Added UCC256402A and UCC256404A versions			
	Added BLK OVP calculation			
	Added burst packet size			
Rev 4.0	added UCC256403A and UCC256404B			
	Added compensation tool from Richard Yang			
	Added integrated leakage gain curve option bas			
	https://product.tdk.com/info/en/catalog/datas			
	Added sheet listing app notes, reference desigr			

	resistor and capacitor lookup table			

				Recommended Llk	13.3753563601	uH					
				Lp based on coupling coefficient	68.4210526315	uH					
k	0.9			Lr1 of T model	7.03966124217	uH					
1/k	1.11111111111										
Zo	8.40398425603			Zo_calc	8.06225774825					Discrete Inductor	
				Q calc	0.3						
LLC Gain Curve Calacultions for plot:											
Note: Qe here is 1/Q in TDK paper											
Qe	Ln	FR	FR^2			total denominator - full load	M - full load	total denominator - no load	M - no load		
0.30	6.00	0.00	0.00							0.00	0.00
0.30	6.00	0.05	0.00	6944.44	44.22	83.60	0.01	83.33	0.01	0.02	0.02
0.30	6.00	0.10	0.01	400.00	10.89	20.27	0.05	20.00	0.05	0.06	0.06
0.30	6.00	0.15	0.02	68.42	4.72	8.55	0.12	8.27	0.12	0.15	0.16
0.30	6.00	0.20	0.04	17.36	2.56	4.46	0.22	4.17	0.24	0.30	0.33
0.30	6.00	0.25	0.06	5.14	1.56	2.59	0.39	2.27	0.44	0.53	0.67
0.30	6.00	0.30	0.09	1.52	1.02	1.60	0.63	1.23	0.81	0.88	1.46
0.30	6.00	0.35	0.12	0.37	0.70	1.04	0.97	0.61	1.63	1.29	5.16
0.30	6.00	0.40	0.16	0.04	0.49	0.73	1.37	0.21	4.80	1.56	8.00
0.30	6.00	0.45	0.20	0.00	0.35	0.59	1.68	0.07	14.58	1.58	2.91
0.30	6.00	0.50	0.25	0.07	0.25	0.57	1.76	0.27	3.75	1.49	2.00
0.30	6.00	0.55	0.30	0.17	0.18	0.59	1.69	0.41	2.42	1.38	1.62
0.30	6.00	0.60	0.36	0.28	0.13	0.63	1.58	0.52	1.91	1.29	1.42
0.30	6.00	0.65	0.42	0.37	0.09	0.68	1.47	0.61	1.64	1.22	1.30
0.30	6.00	0.70	0.49	0.46	0.06	0.72	1.38	0.68	1.47	1.17	1.21
0.30	6.00	0.75	0.56	0.54	0.04	0.76	1.31	0.74	1.36	1.13	1.15
0.30	6.00	0.80	0.64	0.61	0.02	0.80	1.26	0.78	1.28	1.09	1.10
0.30	6.00	0.85	0.72	0.67	0.01	0.83	1.21	0.82	1.22	1.06	1.07
0.30	6.00	0.90	0.81	0.72	0.00	0.85	1.17	0.85	1.18	1.04	1.04
0.30	6.00	0.95	0.90	0.77	0.00	0.88	1.14	0.88	1.14	1.02	1.02
0.30	6.00	1.00	1.00	0.81	0.00	0.90	1.11	0.90	1.11	1.00	1.00
0.30	6.00	1.05	1.10	0.85	0.00	0.92	1.09	0.92	1.09	0.98	0.98
0.30	6.00	1.10	1.21	0.88	0.00	0.94	1.07	0.94	1.07	0.97	0.97
0.30	6.00	1.15	1.32	0.91	0.01	0.96	1.05	0.95	1.05	0.96	0.96
0.30	6.00	1.20	1.44	0.93	0.01	0.97	1.03	0.96	1.04	0.95	0.95
0.30	6.00	1.25	1.56	0.95	0.02	0.99	1.01	0.98	1.02	0.94	0.94
0.30	6.00	1.30	1.69	0.97	0.03	1.00	1.00	0.99	1.01	0.93	0.94
0.30	6.00	1.35	1.82	0.99	0.04	1.02	0.98	1.00	1.00	0.92	0.93
0.30	6.00	1.40	1.96	1.01	0.05	1.03	0.97	1.00	1.00	0.91	0.92
0.30	6.00	1.45	2.10	1.02	0.06	1.04	0.96	1.01	0.99	0.90	0.92
0.30	6.00	1.50	2.25	1.03	0.08	1.05	0.95	1.02	0.98	0.89	0.92
0.30	6.00	1.55	2.40	1.05	0.09	1.07	0.94	1.02	0.98	0.88	0.91
0.30	6.00	1.60	2.56	1.06	0.11	1.08	0.93	1.03	0.97	0.88	0.91
0.30	6.00	1.65	2.72	1.07	0.12	1.09	0.92	1.03	0.97	0.87	0.90
0.30	6.00	1.70	2.89	1.08	0.14	1.10	0.91	1.04	0.96	0.86	0.90
0.30	6.00	1.75	3.06	1.09	0.15	1.11	0.90	1.04	0.96	0.86	0.90
0.30	6.00	1.80	3.24	1.09	0.17	1.13	0.89	1.05	0.96	0.85	0.90
0.30	6.00	1.85	3.42	1.10	0.19	1.14	0.88	1.05	0.95	0.84	0.89
0.30	6.00	1.90	3.61	1.11	0.21	1.15	0.87	1.05	0.95	0.84	0.89
0.30	6.00	1.95	3.80	1.11	0.23	1.16	0.86	1.06	0.95	0.83	0.89
0.30	6.00	2.00	4.00	1.12	0.25	1.17	0.85	1.06	0.94	0.83	0.89
0.30	6.00	2.05	4.20	1.13	0.27	1.18	0.85	1.06	0.94	0.82	0.89
0.30	6.00	2.10	4.41	1.13	0.29	1.19	0.84	1.06	0.94	0.81	0.89
0.30	6.00	2.15	4.62	1.14	0.32	1.20	0.83	1.07	0.94	0.81	0.88
0.30	6.00	2.20	4.84	1.14	0.34	1.22	0.82	1.07	0.94	0.80	0.88
0.30	6.00	2.25	5.06	1.14	0.36	1.23	0.81	1.07	0.94	0.80	0.88
0.30	6.00	2.30	5.29	1.15	0.39	1.24	0.81	1.07	0.93	0.79	0.88
0.30	6.00	2.35	5.52	1.15	0.41	1.25	0.80	1.07	0.93	0.78	0.88
0.30	6.00	2.40	5.76	1.15	0.44	1.26	0.79	1.07	0.93	0.78	0.88
0.30	6.00	2.45	6.00	1.16	0.46	1.27	0.79	1.08	0.93	0.77	0.88
0.30	6.00	2.50	6.25	1.16	0.49	1.28	0.78	1.08	0.93	0.77	0.88
0.30	6.00	2.55	6.50	1.16	0.52	1.30	0.77	1.08	0.93	0.76	0.88
0.30	6.00	2.60	6.76	1.17	0.55	1.31	0.76	1.08	0.93	0.76	0.88
0.30	6.00	2.65	7.02	1.17	0.57	1.32	0.76	1.08	0.93	0.75	0.87
0.30	6.00	2.70	7.29	1.17	0.60	1.33	0.75	1.08	0.92	0.75	0.87
0.30	6.00	2.75	7.56	1.17	0.63	1.34	0.74	1.08	0.92	0.74	0.87
0.30	6.00	2.80	7.84	1.18	0.66	1.36	0.74	1.08	0.92	0.74	0.87
0.30	6.00	2.85	8.12	1.18	0.69	1.37	0.73	1.09	0.92	0.73	0.87
0.30	6.00	2.90	8.41	1.18	0.73	1.38	0.72	1.09	0.92	0.72	0.87
0.30	6.00	2.95	8.70	1.18	0.76	1.39	0.72	1.09	0.92	0.72	0.87
0.30	6.00	3.00	9.00	1.18	0.79	1.40	0.71	1.09	0.92	0.71	0.87
0.30	6.00	3.05	9.30	1.18	0.82	1.42	0.71	1.09	0.92	0.71	0.87
0.30	6.00	3.10	9.61	1.19	0.86	1.43	0.70	1.09	0.92	0.70	0.87
0.30	6.00	3.15	9.92	1.19	0.89	1.44	0.69	1.09	0.92	0.70	0.87
0.30	6.00	3.20	10.24	1.19	0.93	1.45	0.69	1.09	0.92	0.69	0.87
0.30	6.00	3.25	10.56	1.19	0.96	1.47	0.68	1.09	0.92	0.69	0.87
0.30	6.00	3.30	10.89	1.19	1.00	1.48	0.68	1.09	0.92	0.68	0.87
0.30	6.00	3.35	11.22	1.19	1.03	1.49	0.67	1.09	0.92	0.68	0.87
0.30	6.00	3.40	11.56	1.19	1.07	1.51	0.66	1.09	0.92	0.67	0.87
0.30	6.00	3.45	11.90	1.20	1.11	1.52	0.66	1.09	0.91	0.67	0.87
0.30	6.00	3.50	12.25	1.20	1.15	1.53	0.65	1.09	0.91	0.67	0.87
0.30	6.00	3.55	12.60	1.20	1.19	1.54	0.65	1.09	0.91	0.66	0.87

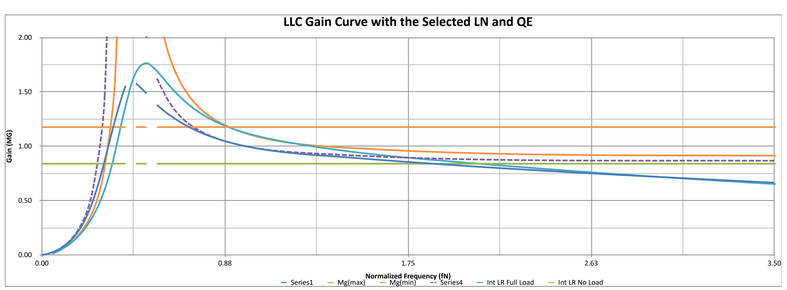

UCC25640X LLC Loop Plot & Load Transient Validation & Tuning Tool

LLC Power Stage Input			
PFC input	Vin	315	VDC
Output Rectifier forward Voltage	Vf	1.000	VDC
Set output Voltage	Vo_set	24	VDC
Output Load current under R Load	Io	25	A
output total Capacitor Value	Co	1880	uF
Equivalent ESR for Co	Rc	2	mΩ
LLC Transformer Magnetizing Inductance	Lm	80	uH
LLC Transformer Resonant Inductance	Ls	13	uH
LLC Resonant Capacitor	Cr	200	nF
Equivalent Transformer Turn Ratio(Np:Ns)	N	6.00	
Actual Operation Frequency(Measured)	Fs	100	kHz
Output R_Load	Rload	1.000	Ω
Eqivalent LLC output	Vo	25.000	VDC
Resonant Frequency	Fo	9.87E+01	kHz
PFC Input AC Ripple(pk-pk)	Vinac	10	VAC
PFC Input AC Frequency	Fline	50	HZ

Crossover Frequency		7.94	kHz
Phase Margin		3747365994	°

LLC Controller Parameter Setting			
VCR divider Capacitor_Higher Cap	CdivH	110.0	pF
VCR divider Capacitor_Lower Cap	CdivL	7.2	nF
Calculated Parralled value	Cdivp	3.3447332421	pF
Calcualted Series Value	Cdivs	7.31	nF
Calcualted divided Value	λ	50478796169	
MOS Junction Capacitor	Cj	0.188	nF
Output Load Transient Setting			
Load step current	I_step	15	A
Load current step Duty cycle	Dstep	0.5	
Load step Frequency	fload	0.2	KHz
Load step slew rate	kslew	20	A/us
Load step Rising time	tr	7.50E-07	s
Load step on time	th	2.50E-03	s
Load step Period	tload	5.00E-03	s
Center Step Load current	Istep_avg	5	A

UCC25640X Loop Circuit setting			
Equivalent Controller Internal Resistor	RFB	50	kΩ
Feedback Pull up Resistor	Rf	9.09	kΩ
OPTO Current Transfer Ratio	CTR	0.4	
OPTO Rolling off Frequency	f_roll	8	kHz
Resistor for f_roll compensation	Rz	1210	Ω
Calculate Cz for f_roll compensation	Cz_cal	1.74E+00	nF
Capacitor for f_roll compensation	Cz	4.7	nF
Rv compensation	Rv	33.2	kΩ
Cv compensation	Cv	10	nF
Cf compensation	Cf	150	pF
High side feedack resistor	Rupper	147	kΩ
Feedack Circuit Design Option			
Use capacitor Cf?("Yes" for 1 and "No" for 0)		α_Cf	1
Use Rz and Cz?("Yes" for 1 and "No" for 0)		α_Rz_Cz	1
Connect Rf to Vout?("Yes" for 1 and "No" for 0)		feedtype	1

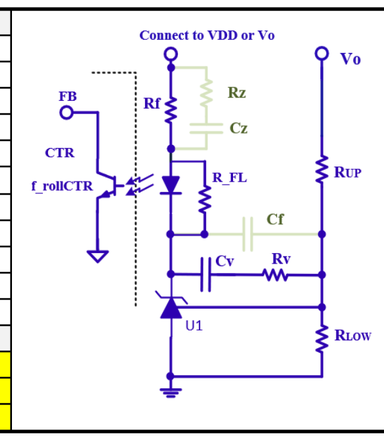

Calculation Result

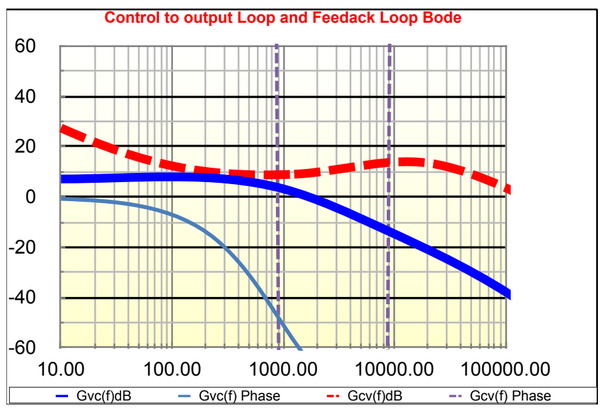

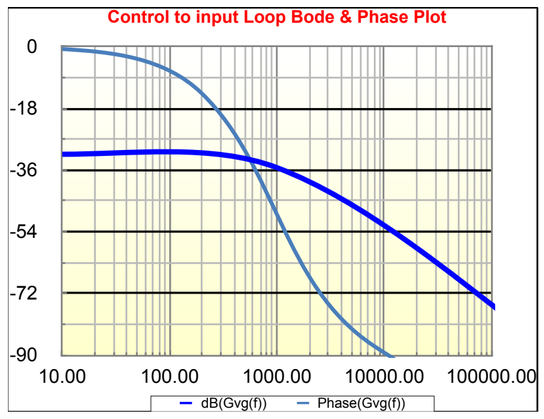

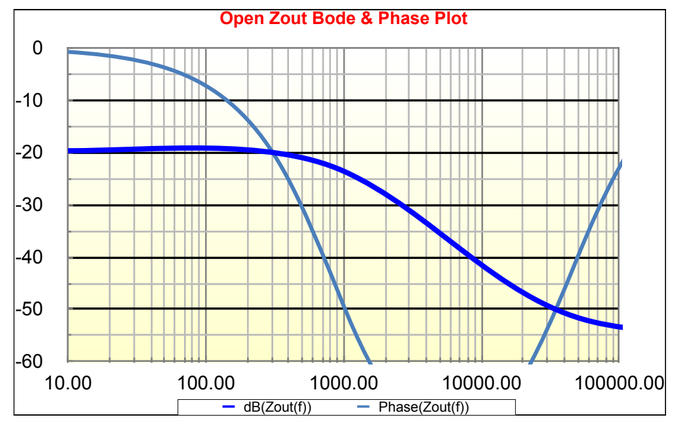

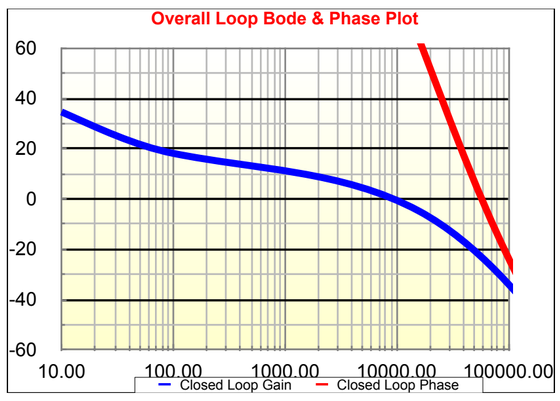

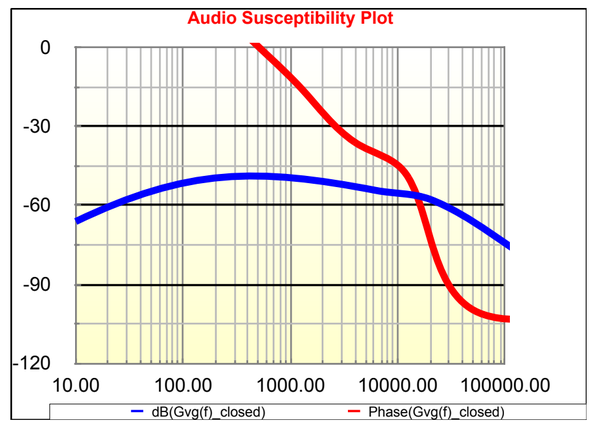

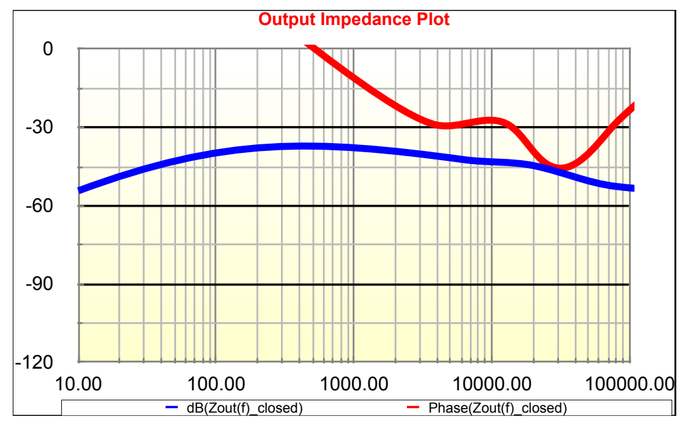

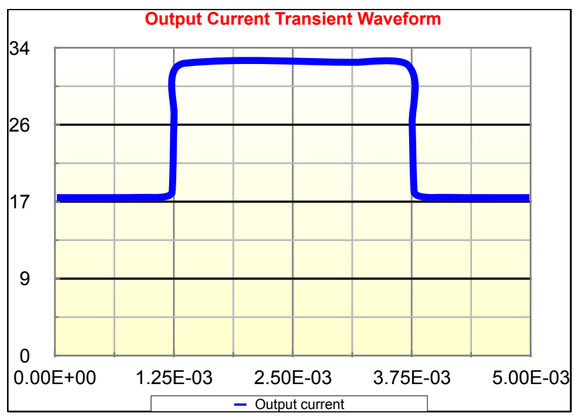

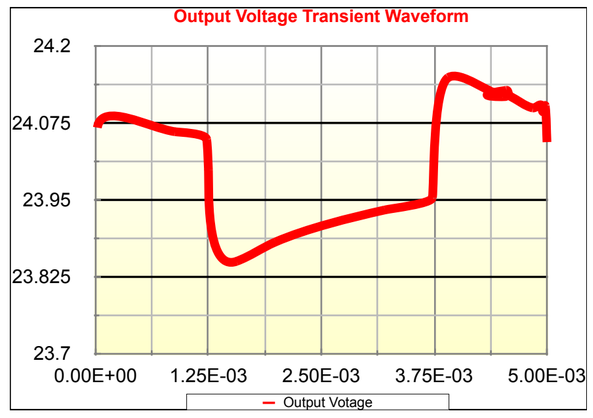

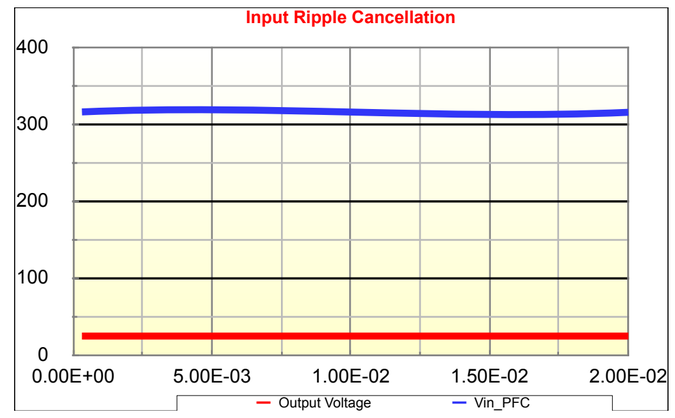

Application Notes				
How to reduce audible noise and power consumption at standby in your AC/DC design				
Migrating to UCC25640x from UCC25630x (Rev. A)				
Improving Transient Response in LLC Converters Using Hybrid Hysteretic Control (Rev. A)				
EVMs				
AC to isolated DC EVM with UCC28056B, UCC256404 and UCC24624				
UCC25640x half bridge LLC evaluation module				
Reference Designs				
180-W universal input PFC + LLC TV power supply reference design				
93% Efficiency, 400-W AC/DC reference design for avionics				
336-W Auxless AC/DC power supply reference design with 80 PLUS platinum compatible performance				
LLC Resonant converter control card reference design				
Universal input, 500-W CC/CV e-Bike charger reference design				
Single-stage AC/DC LCC resonant converter reference design				
>95% Efficiency, 1-kW analog control AC/DC reference design for 5G telecom rectifier				
Simplis Simulation Model				
UCC25640x Simplis Model				