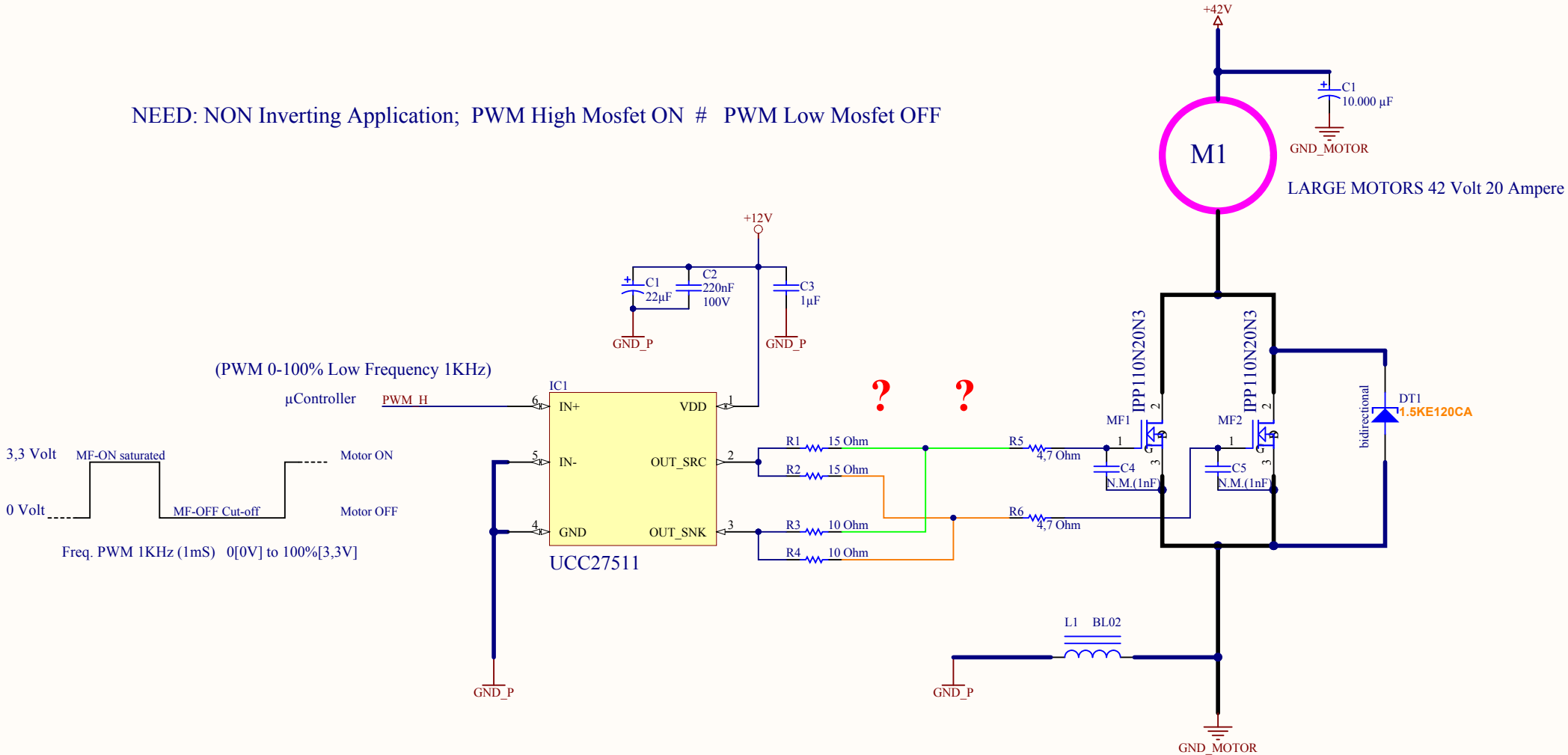NEED: NON Inverting Application; PWM High Mosfet ON # PWM Low Mosfet OFF