LT1248 shown but only look at Current sense transformer bit

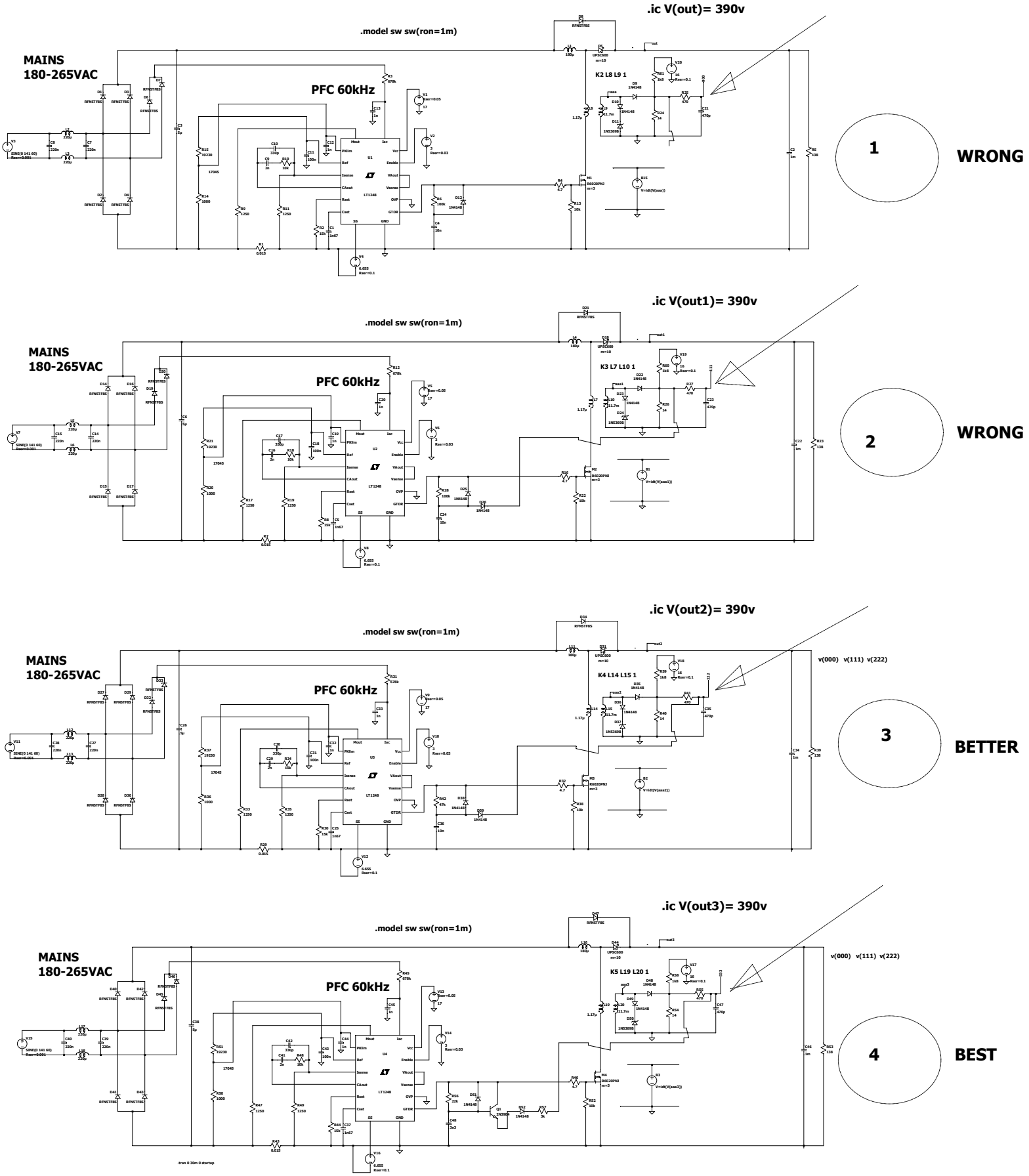

--- C:\Users\masse\Documents\ucc28070a___incorrect\LT1248 Boost PFC 1000W 100vac_CST.asc ---