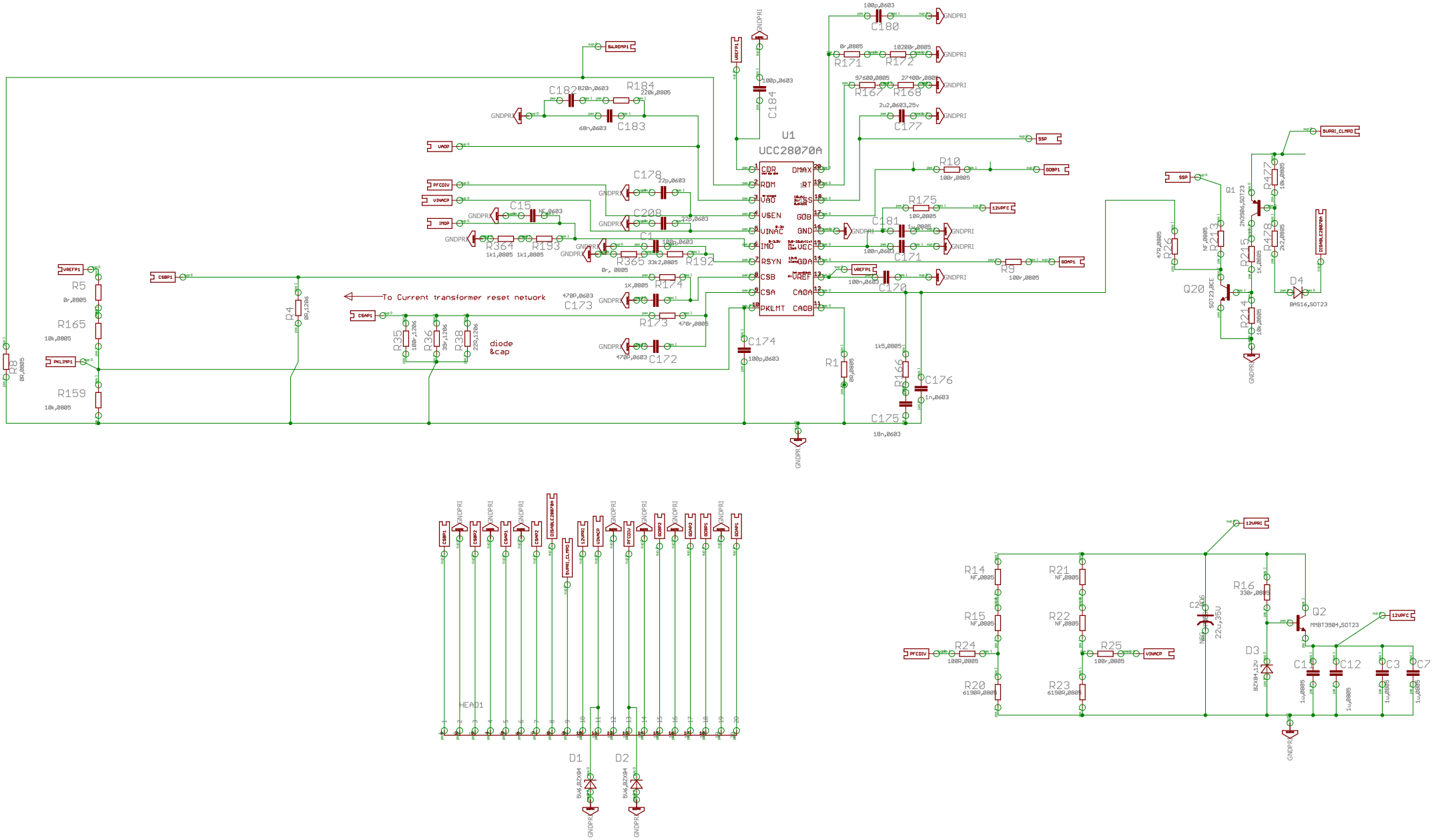PFC Controller