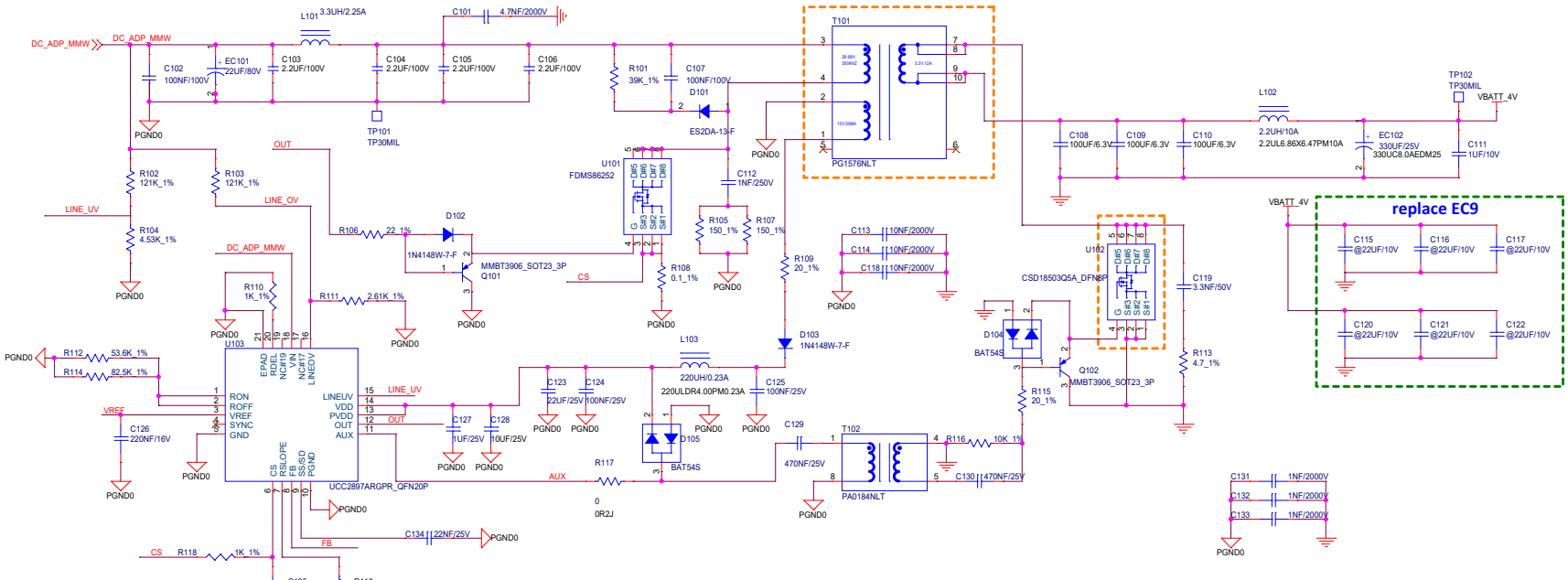

Feedback Circuit of flyback

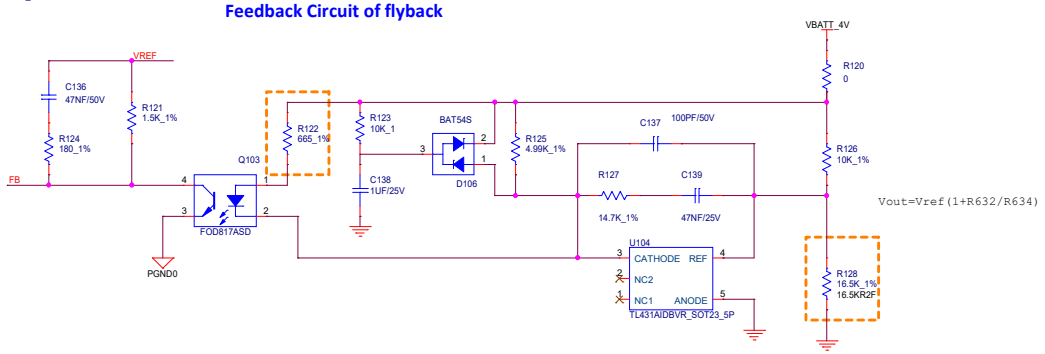

Vout=2.5(1+10/2.61)=12.07

WNC Proprietary & Confidential				
Title <Title>				
Size C	Model Name <Doc>	Part Number <Part Number>	Author <Author>	Rev <RevCode>
Date: Monday, October 12, 2020		Sheet 2 of 2		