# Major Functional Blocks of UCC29002
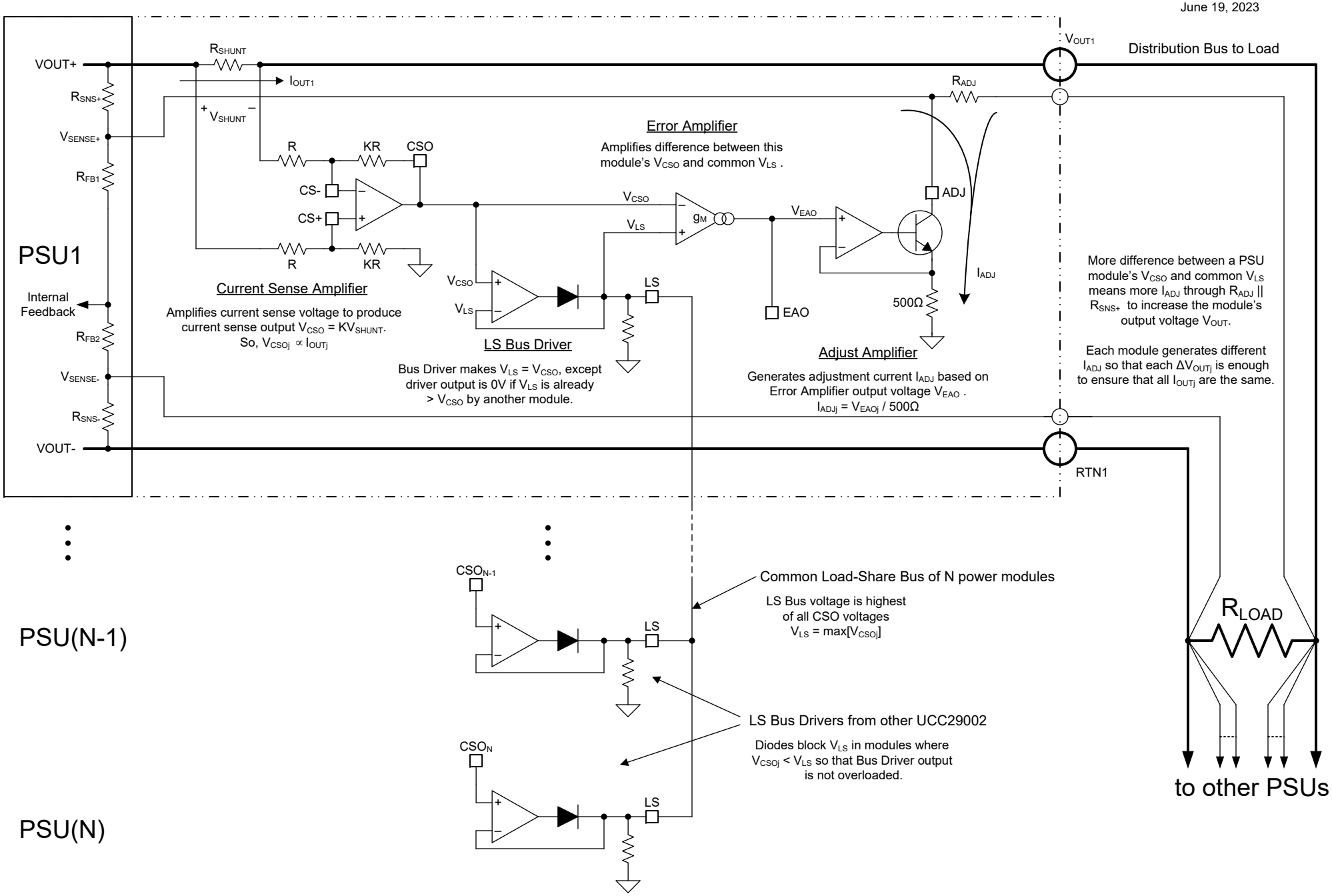
U.Goerke
Texas Instruments
June 19, 2023