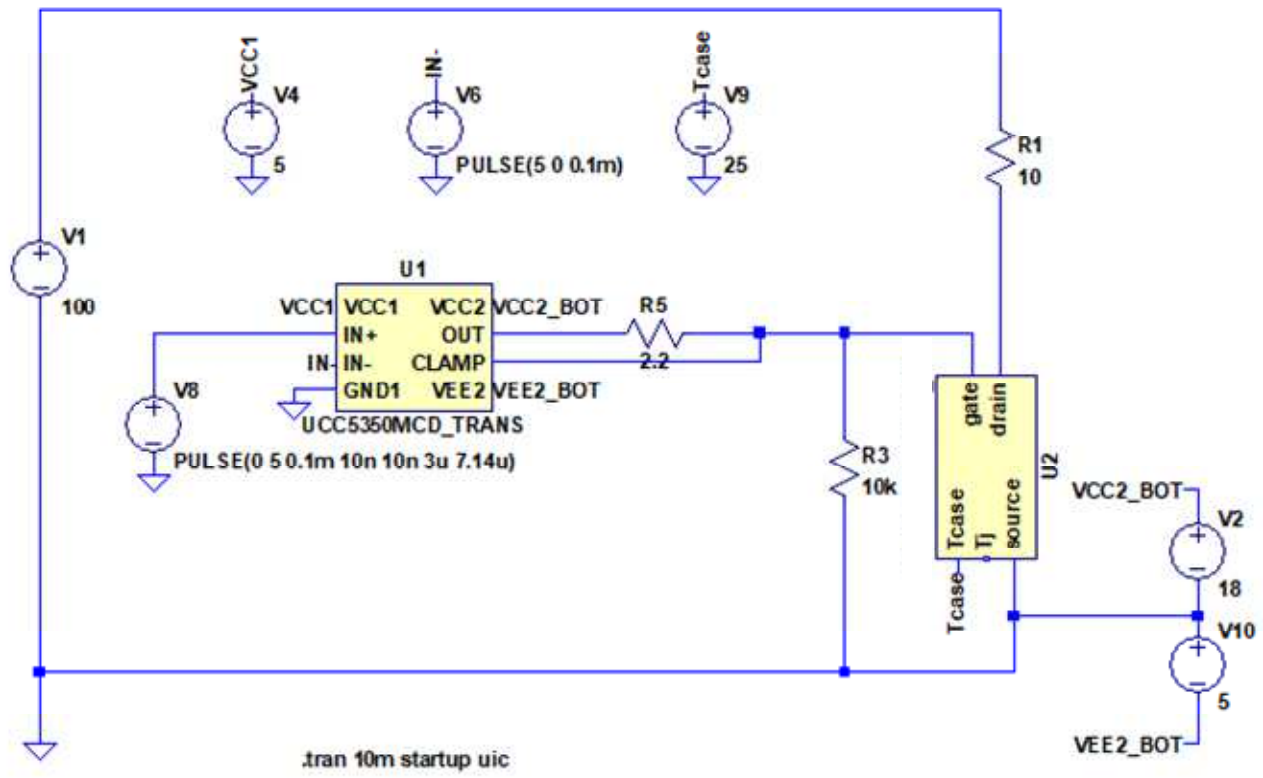
VCC1
V4
5
IN-
V6
PULSE(5 0 0.1m)
Tcase
V9
25
R1
10
V1
100
U1
VCC1
VCC1
IN+
IN-
IN-
GND1
VCC2
OUT
CLAMP
VEE2
VCC2_BOT
VEE2_BOT
R5
2.2
UCC5350MCD_TRANS
V8
PULSE(0 5 0.1m 10n 10n 3u 7.14u)
R3
10k
gate
drain
Tcase
Tj
source
U2
Tcase
VCC2_BOT
V2
18
V10
5
VEE2_BOT
.tran 10m startup uic

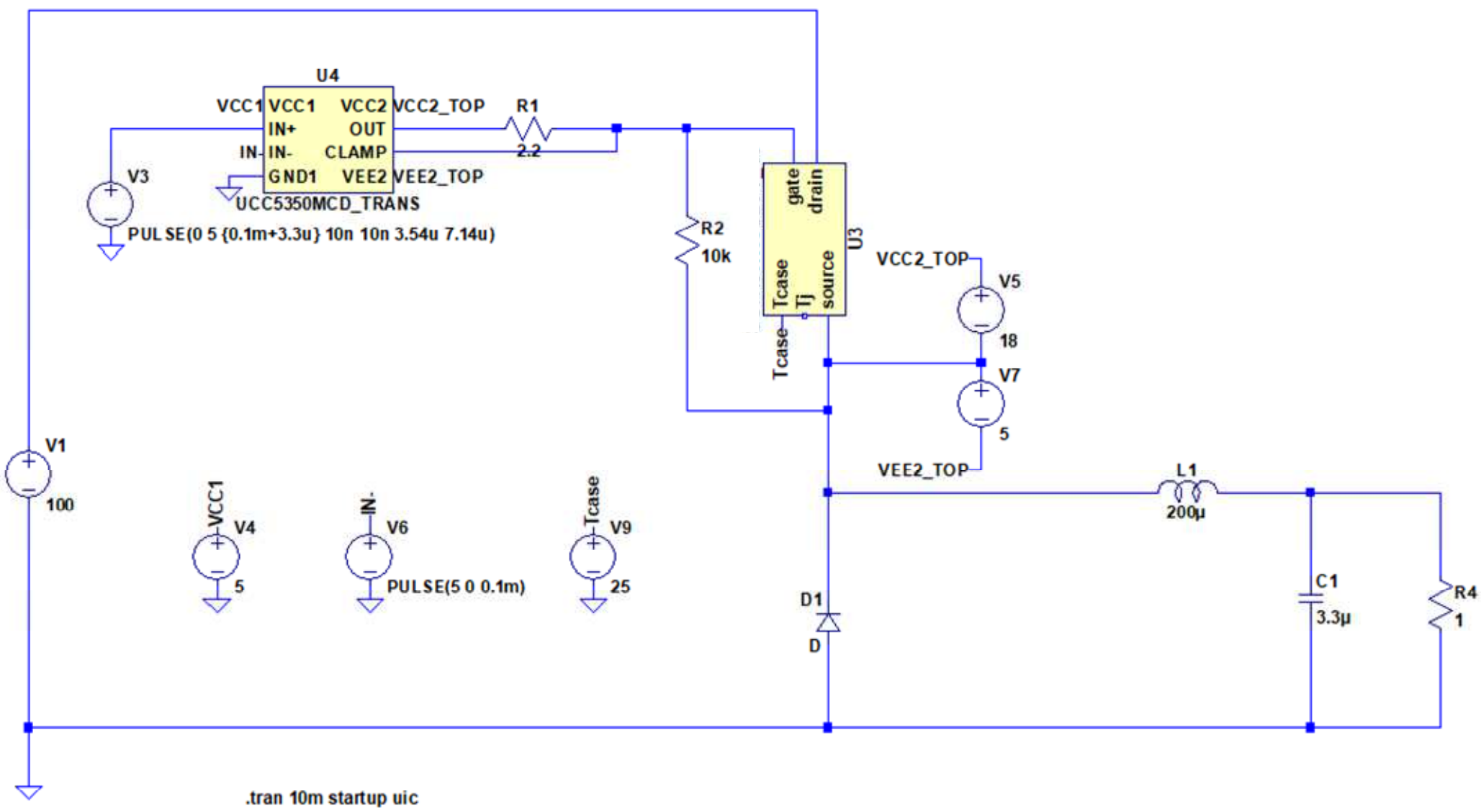
U4
VCC1
VCC1
IN+
IN-
IN-
GND1
VCC2
OUT
CLAMP
VEE2
VCC2_TOP
VEE2_TOP
R1
2.2
UCC5350MCD_TRANS
V3
PULSE(0 5 {0.1m+3.3u} 10n 10n 3.54u 7.14u)
R2
10k
gate
drain
Tcase
Tj
source
U3
Tcase
VCC2_TOP
V5
18
V7
5
VEE2_TOP
V1
100
VCC1
V4
5
IN-
V6
PULSE(5 0 0.1m)
Tcase
V9
25
L1
200µ
C1
3.3µ
R4
1
D1
D
.tran 10m startup uic