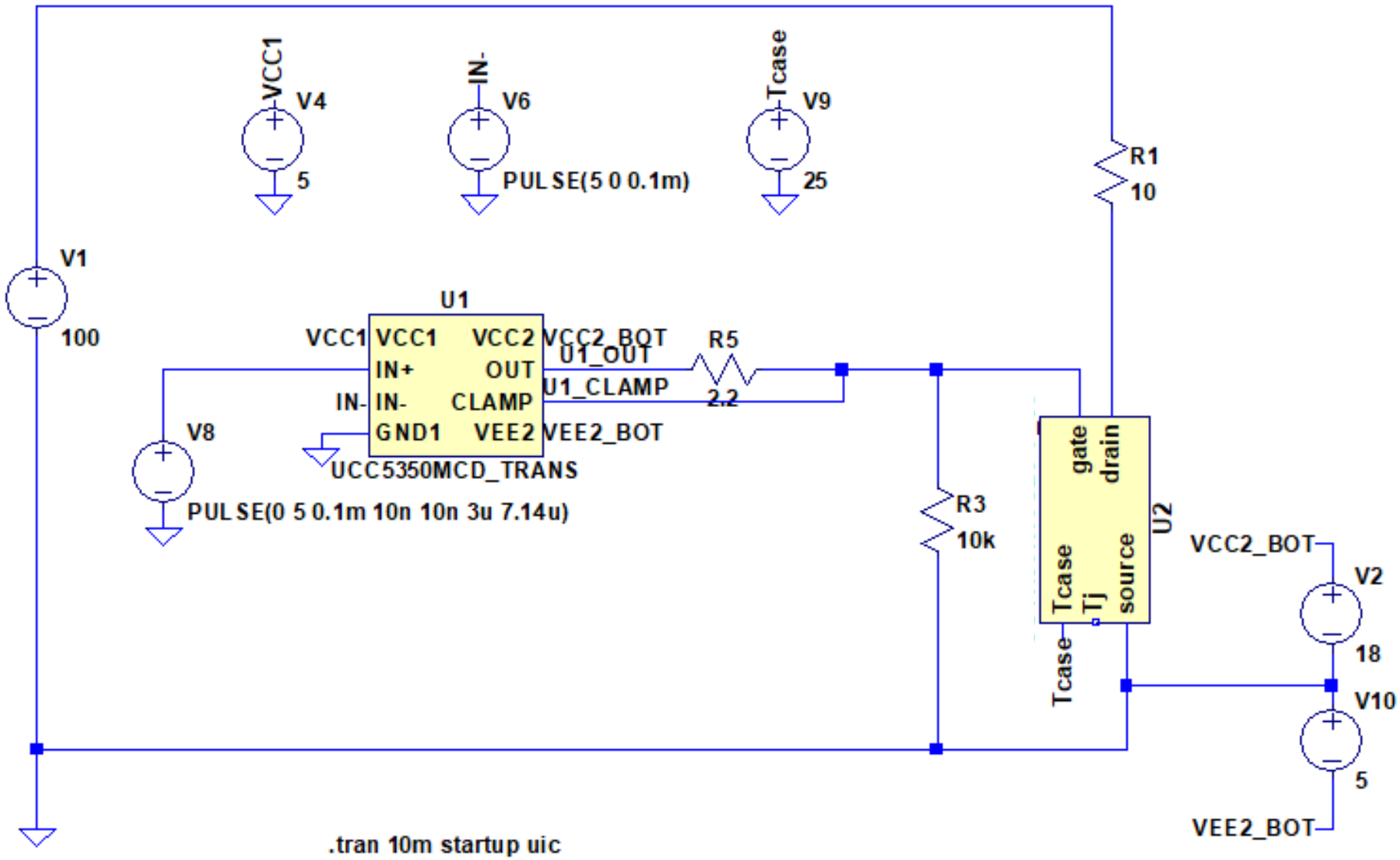
VCC1
V4
5
IN-
V6
PULSE(5 0 0.1m)
Tcase
V9
25
R1
10
V1
100
U1
VCC1
VCC1
IN+
IN-
GND1
VCC2
OUT
CLAMP
VEE2
VCC2_BOT
U1_OUT
U1_CLAMP
VEE2_BOT
R5
2.2
IN-
V8
PULSE(0 5 0.1m 10n 10n 3u 7.14u)
UCC5350MCD_TRANS
R3
10k
gate
drain
Tcase
Tj
source
U2
Tcase
VCC2_BOT
V2
18
V10
5
VEE2_BOT
.tran 10m startup uic

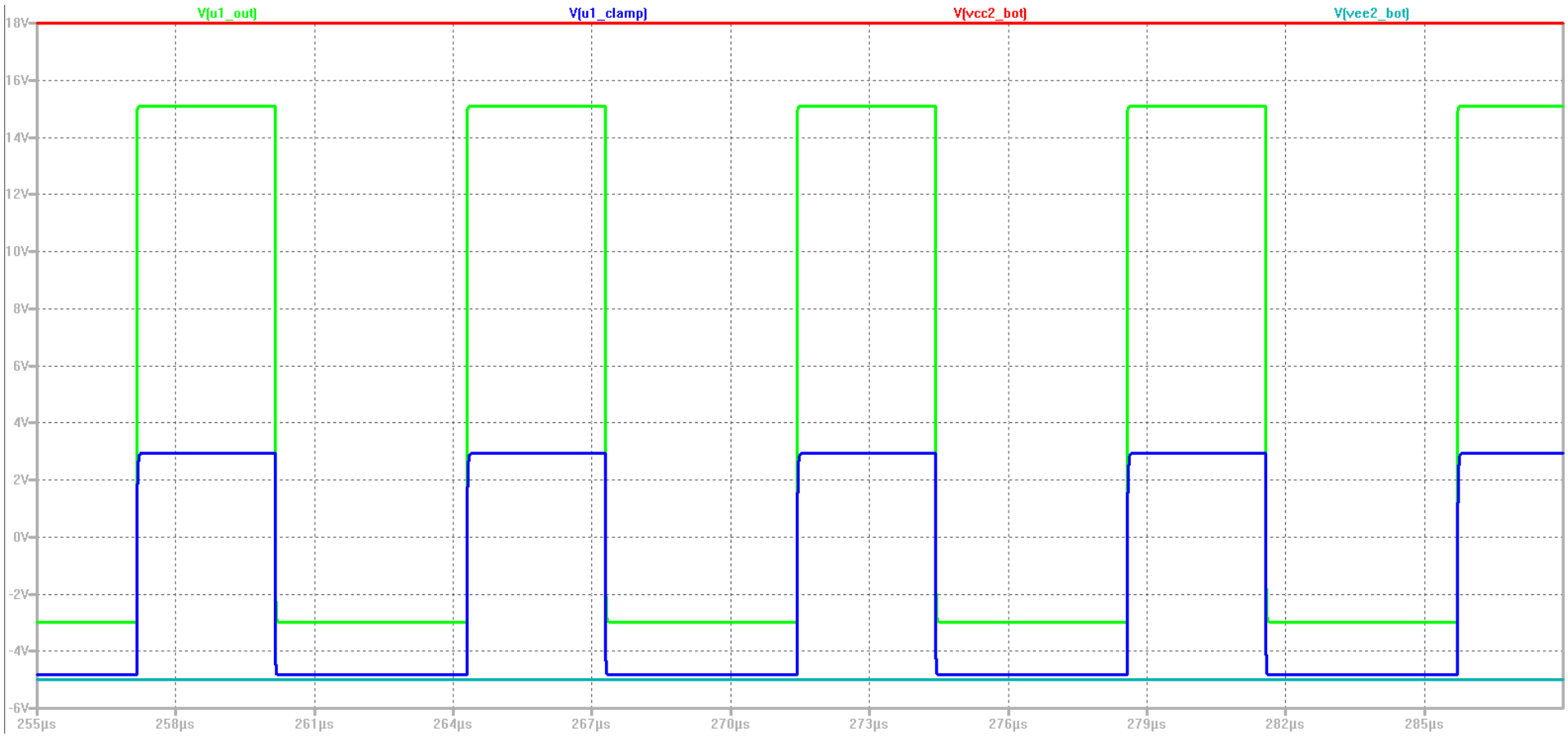
V(u1_out)
V(u1_clamp)
V(vcc2_bot)
V(vee2_bot)
18V
16V
14V
12V
10V
8V
6V
4V
2V
0V
-2V
-4V
-6V
255µs
258µs
261µs
264µs
267µs
270µs
273µs
276µs
279µs
282µs
285µs