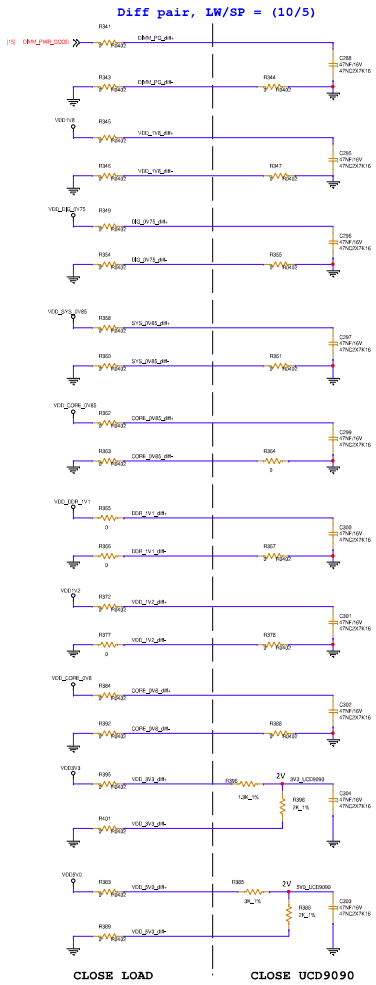

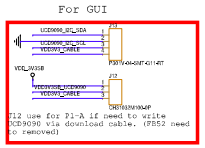

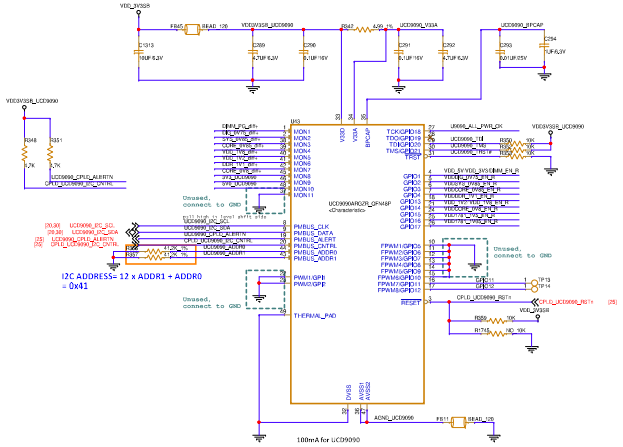

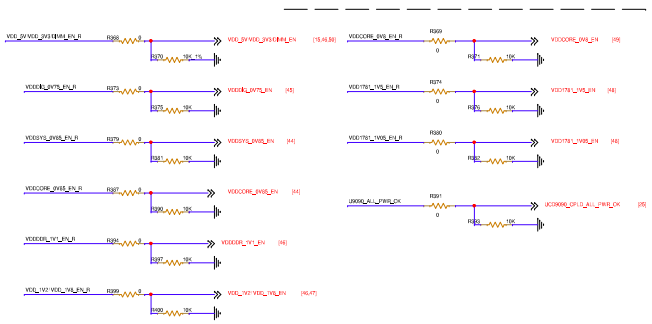

Figure 47–1 Power-Up Sequencing

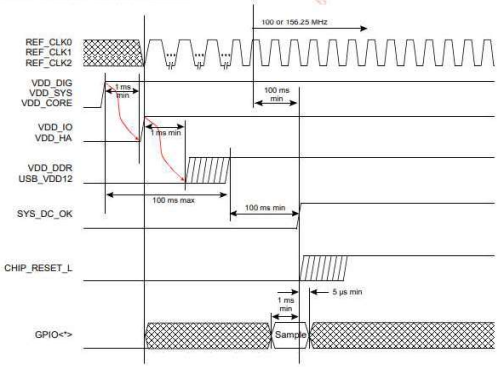

WNC Proprietary & Confidential

Title	28_POWER SEQUENCE_UCD9090			
Size: D	Model Name: QAT40b-P1FF16	Part Number: 86QAT4001J001	Author: Raymond Su	Rev: A
Date: Wednesday, April 23, 2025		Sheet 28 of 57		