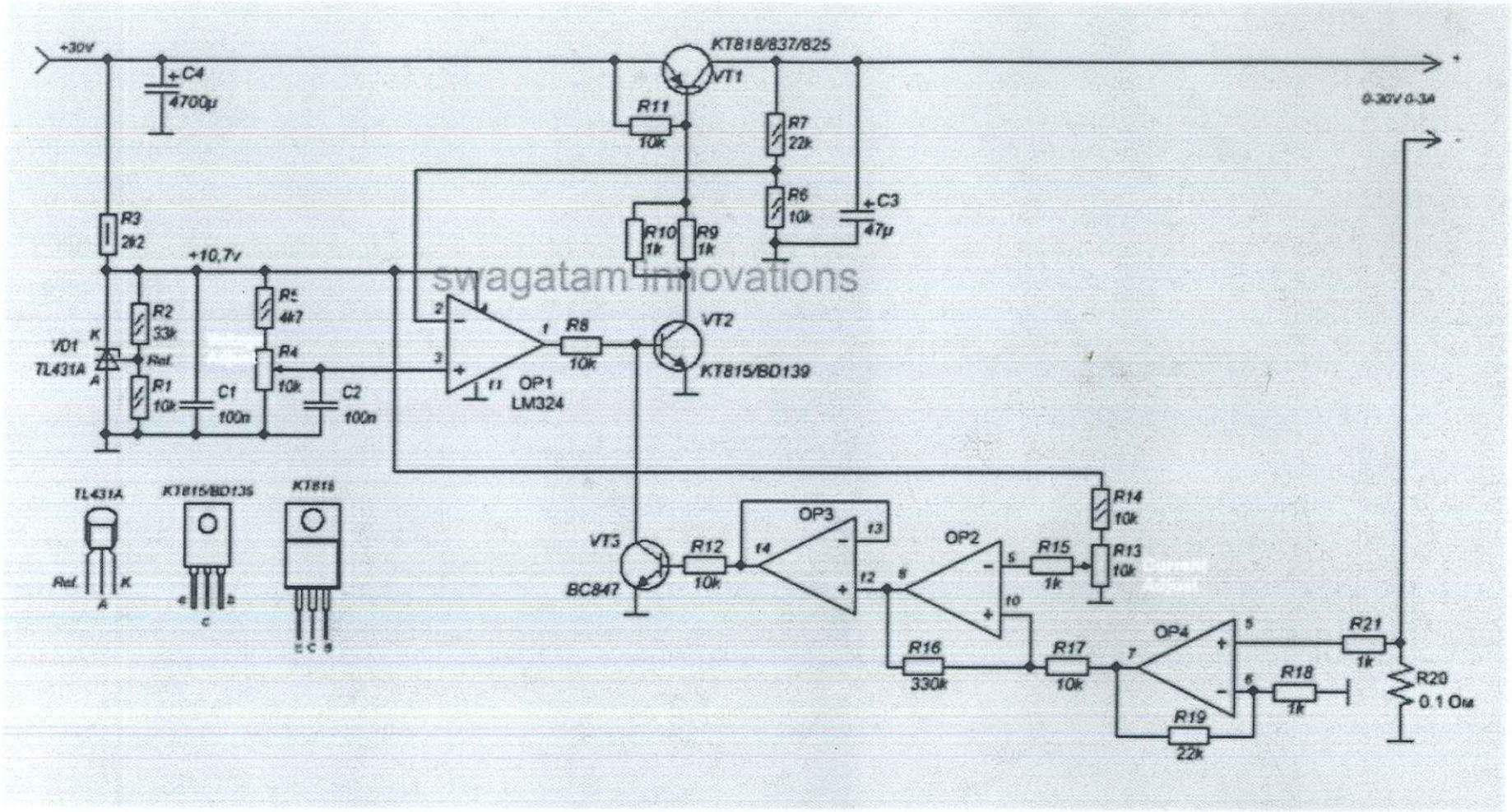

swagatam innovations