USB 3.0 HUB INTERFACE

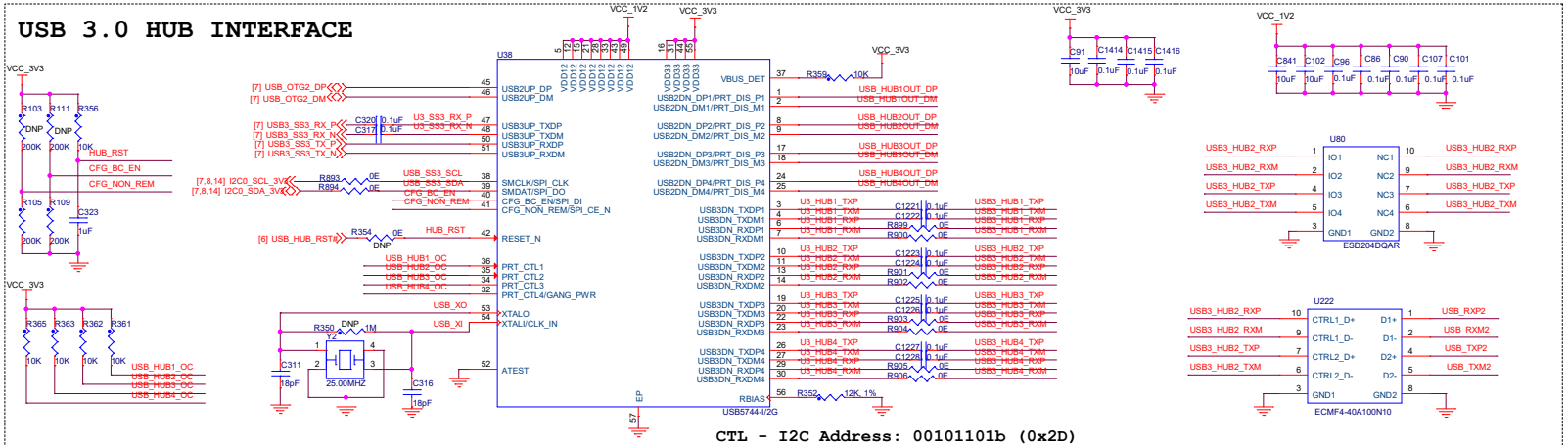

CTL - I2C Address: 00101101b (0x2D)

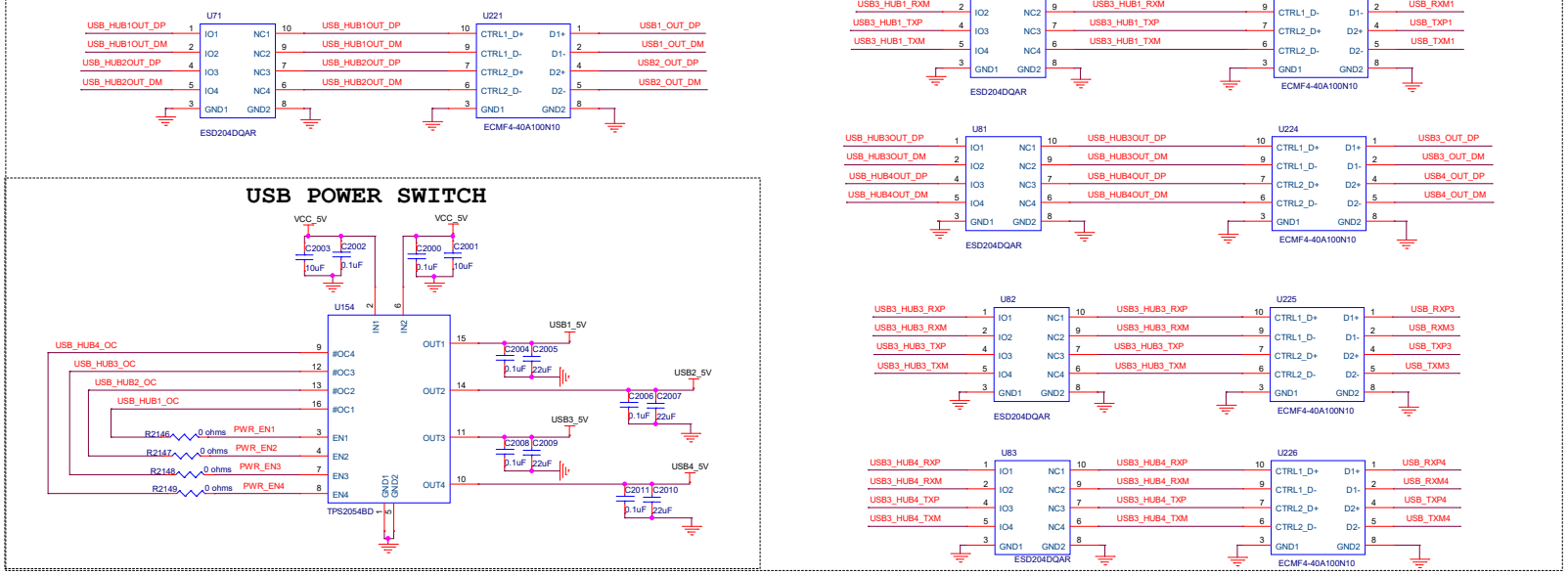

USB POWER SWITCH

Title	<Title>
Size A2	Document Number <Doc>
Rev	<Rev>
Date: Tuesday, April 21, 2026	Sheet 1 of 1