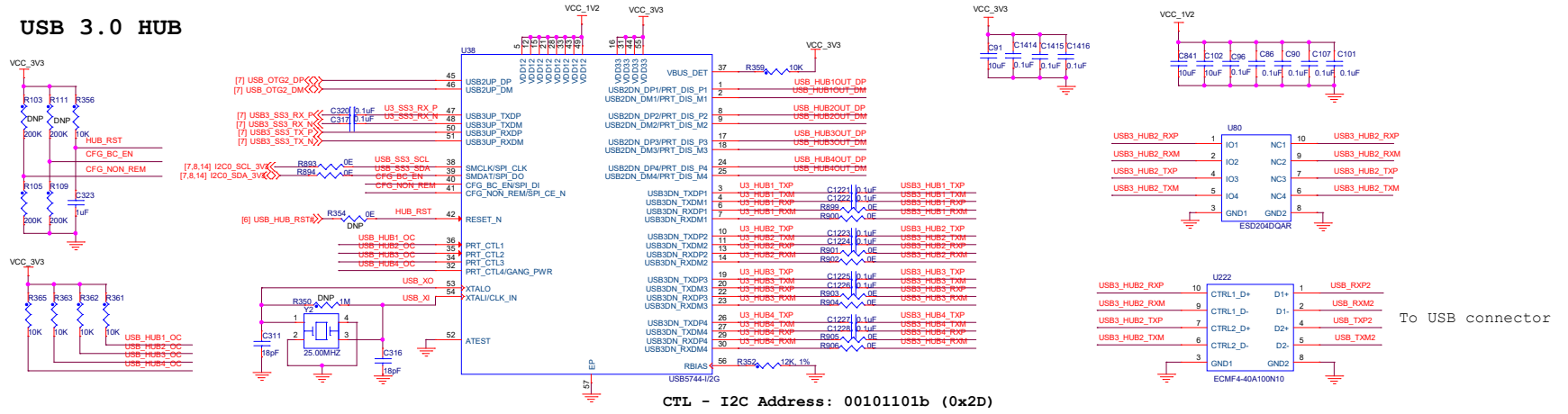

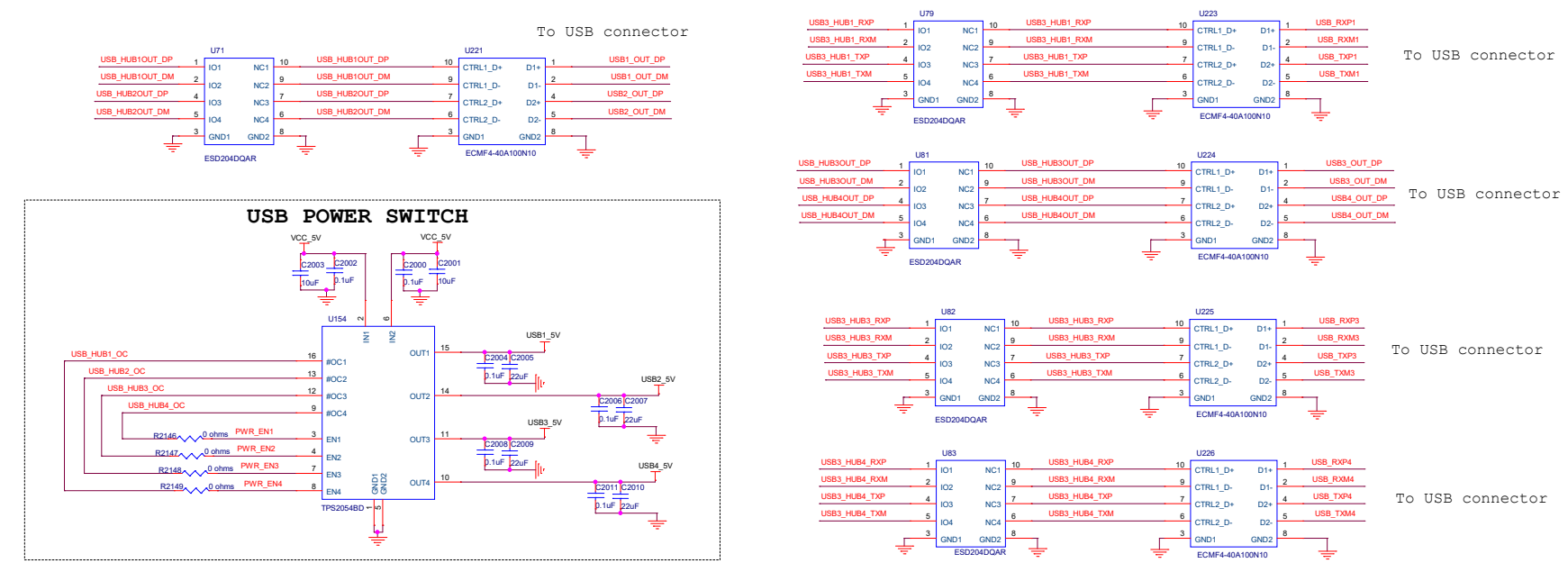

Title	<Title>		
Size A2	Document Number <Doc>		Rev <Rev>
Date: Tuesday, April 21, 2026	Sheet 1 of 1		