USB-PD

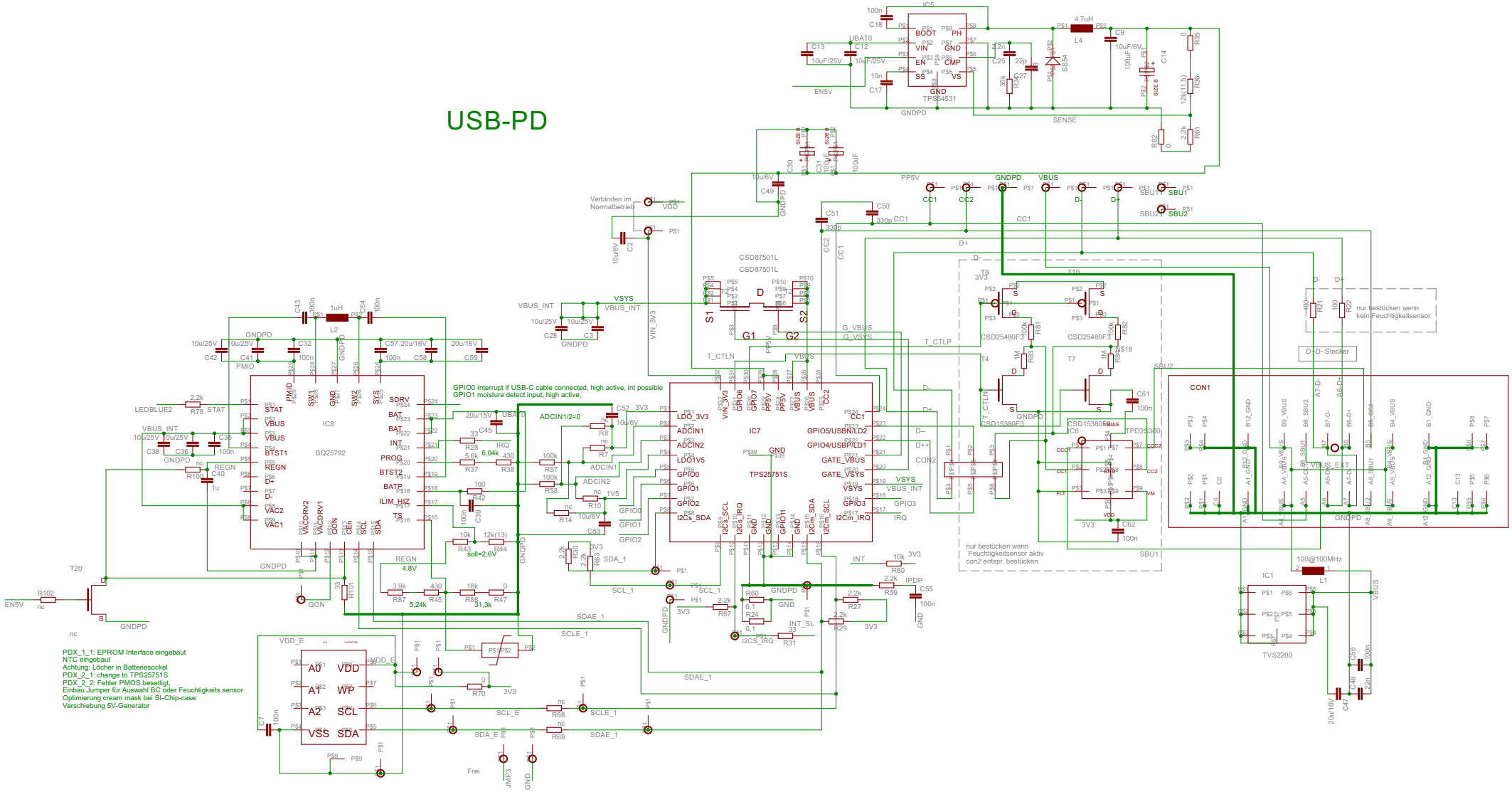

13.01.2025 18:04:12 f=0.53 C:\Users\kaschroed\Documents\Eagle_daten\projects\RadUSB\USB_PDX_2_2.sch (Sheet: 2/2)