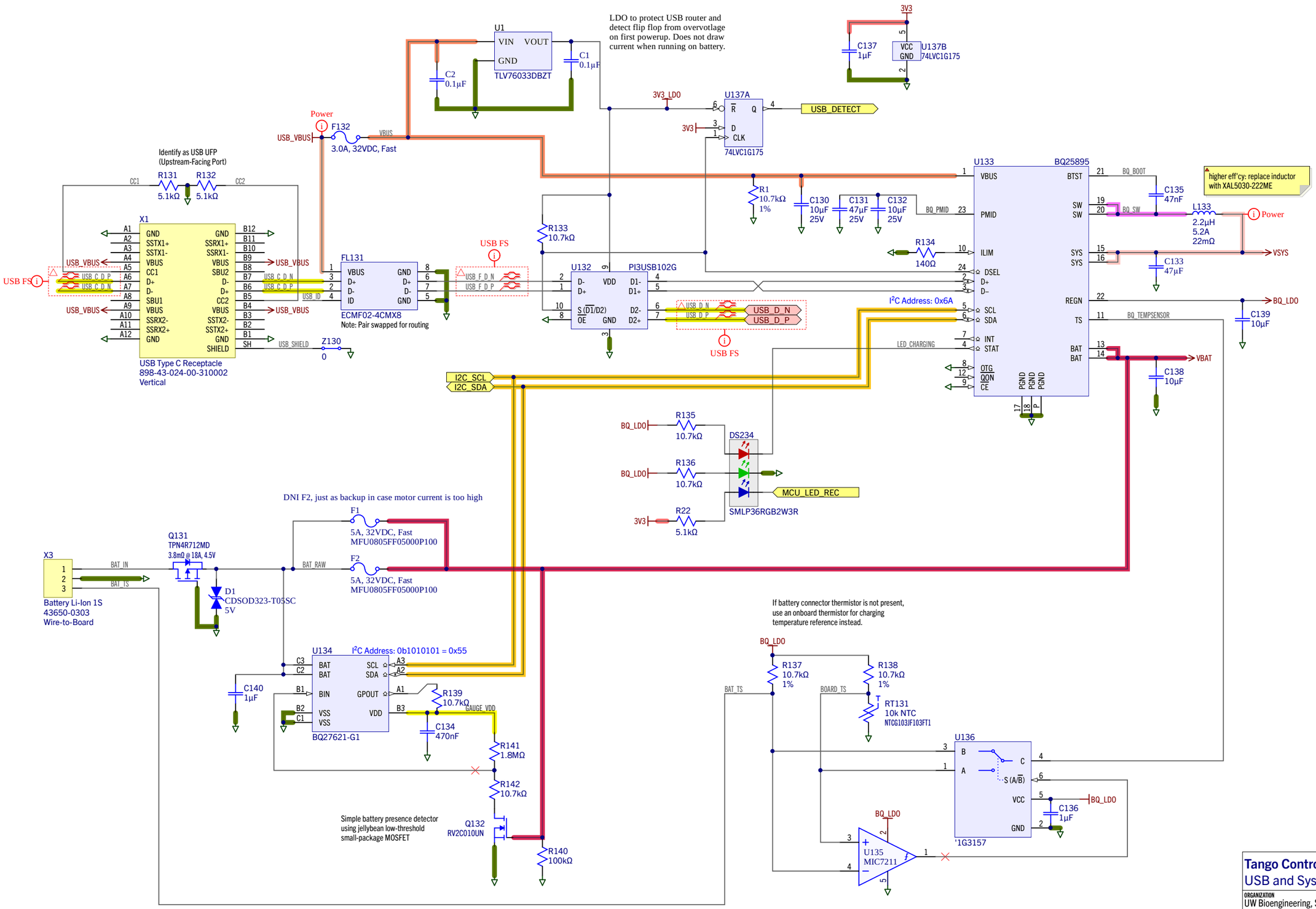

Tango Controller
USB and System Power

ORGANIZATION UW Bioengineering, Sanders Lab	DESIGNER S. Bennett	REVISION A
FILE USB_and_Batt.SchDoc	DATE 2/11/2020	SHEET 13 OF 15