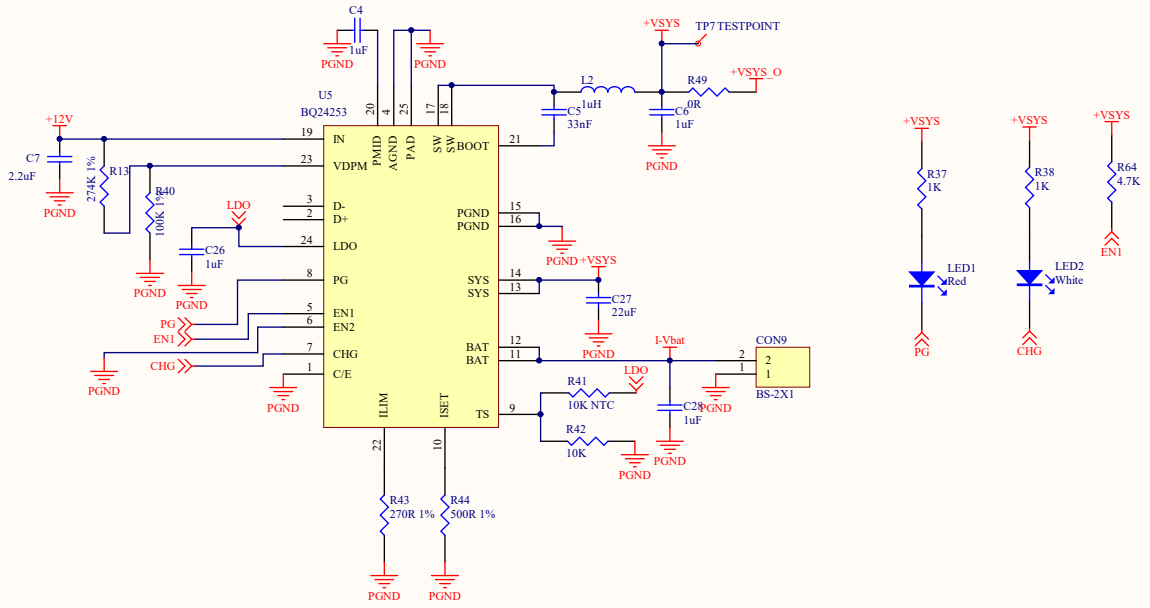

Project Title *Vehiclest GPS Vehicle Tracker-Eclipse*			*VST Travel Solutions* *Inkel Tower 1st Floor* *Angamaly, Ernakulam* *Kerala* *India 683573*
Series VST0507C	Number: IR	Revision: 2.1	
Date: 1/23/2019	Time: 8:51:31 PM	Sheet 4 of 7	
File:			

Comment	Description	Designator	Footprint	Library Reference	LibRef	Quantity	Library Name	Model/Footprint	PN	MF	MP
0.1uF/ 10V	Capacitor	C1	0603_C	CAP	CAP	1	Cap_SCH.Lib	0603_C			
10uF	Capacitor	C2	0603_C	CAP	CAP	1	Cap_SCH.Lib	0603_C			
100nF	Capacitor	C3, C32	0603_C	CAP	CAP	2	Cap_SCH.Lib	0603_C			
1uF	Capacitor	C4, C6, C26, C28	0603_C	CAP	CAP	4	Cap_SCH.Lib	0603_C			
33nF	Capacitor	C5	0603_C	CAP	CAP	1	Cap_SCH.Lib	0603_C			
2.2uF	Capacitor	C7	0603_C	CAP	CAP	1	Cap_SCH.Lib	0603_C			
10uF	Capacitor	C8	0402_C	CAP	CAP	1	Cap_SCH.Lib				
10uF/ 10Vmin	Capacitor - Polarised SMD type	C9	1206_C_POL	CAP_POL_S	CAP_POL_S	1	Cap_SCH.Lib	1206_C_POL			
10uF	Capacitor - Polarised SMD type	C10, C14	0805_C_POL	CAP_POL_S	CAP_POL_S	2	Cap_SCH.Lib				
12pF	Capacitor	C11, C12	0603_C	CAP	CAP	2	Cap_SCH.Lib	0603_C	VJ0402A120FXQCW1BC		
0.47uF/ 25V	Capacitor	C13	0805_C	CAP	CAP	1	Cap_SCH.Lib	0805_C			
10uF/ 10V	Capacitor - Polarised SMD type	C15	1206_C_POL	CAP_POL_S	CAP_POL_S	1	Cap_SCH.Lib	1206_C_POL			
220uF/ 10V	Capacitor - Polarised SMD type	C16	D_C_POL	CAP_POL_S	CAP_POL_S	1	Cap_SCH.Lib				
10uF/ 10V	Capacitor	C17	1206_C	CAP	CAP	1	Cap_SCH.Lib	1206_C			
1uF	Capacitor	C18	0402_C	CAP	CAP	1	Cap_SCH.Lib				
100nF	Capacitor	C19	0805_C	CAP	CAP	1	Cap_SCH.Lib	0805_C			
2.2uF/ 50V	Capacitor	C20	1206_C	CAP	CAP	1	Cap_SCH.Lib	1206_C			
0.1uF	Capacitor	C21, C37, C38, C57, C58, C61	0402_C	CAP	CAP	6	Cap_SCH.Lib				
22uF/ 10uF	Capacitor - Polarised SMD type	C22	1206_C_POL	CAP_POL_S	CAP_POL_S	1	Cap_SCH.Lib	1206_C_POL			
0.1uF	Capacitor	C23	0603_C	CAP	CAP	1	Cap_SCH.Lib	0603_C			
100uF	Capacitor - Polarised SMD type	C24	0805_C_POL	CAP_POL_S	CAP_POL_S	1	Cap_SCH.Lib				
100nF	Capacitor	C25, C39, C40	0402_C	CAP	CAP	3	Cap_SCH.Lib				
22uF	Capacitor	C27	0603_C	CAP	CAP	1	Cap_SCH.Lib	0603_C			
10pF	Capacitor	C30	0402_C	CAP	CAP	1	Cap_SCH.Lib				
33pF	Capacitor	C31	0402_C	CAP	CAP	1	Cap_SCH.Lib				
8.2nF	Capacitor	C33	0603_C	CAP	CAP	1	Cap_SCH.Lib	0603_C			
47uF/ 16V	Capacitor - Polarised SMD type	C34	D_C_POL	CAP_POL_S	CAP_POL_S	1	Cap_SCH.Lib				
NM	Capacitor	C41, C42, C59, C60	0402_C	CAP	CAP	4	Cap_SCH.Lib				
33pF,25V	Capacitor	C43, C55, C56	0402_C	CAP	CAP	3	Cap_SCH.Lib				
100nF,25V	Capacitor	C53	0402_C	CAP	CAP	1	Cap_SCH.Lib				
DNM	Capacitor	C54	0402_C	CAP	CAP	1	Cap_SCH.Lib				
SMA_CONNECTOR	2-Pin Antenna connector	CON1, CON14	U.FL-R-SMT-1	SMA_CONNECTOR	SMA_CONNECTOR	2	CONs_SCH.Lib				
629105150921	WR-COM_USB_Micro Type AB_Horizontal_SMT	CON2	629105150921	WR-Communication Connectors 629105150921	WR-Communication Connectors 629105150921	1	629105150521 (rev16d).IntLib		629105150921		
BS-5X1	5X2 Pin Header	CON3	WE5S	BS-5X1	BS-5X1	1	CONs_SCH.Lib	WE5S			
BS-3X1	3 Pin Header	CON4	WE3S	BS-3X1	BS-3X1	1	CONs_SCH.Lib				
BS-2X1	2 Pin Header	CON9, CON18	WE2S	BS-2X1	BS-2X1	2	CONs_SCH.Lib	WE2S			
BS-6X1	6x1 Pin Header	CON11, CON16	WE6S - 1.27	BS-6X1	BS-6X1	2	CONs_SCH.Lib				
BS-3X2	4X2 Pin Header	CON17	WE8D - SMD	BS-3X2	BS-3X2	1	CONs_SCH.Lib				
BS-2X1	2 Pin Header	CON19	WE2S - 1.27	BS-2X1	BS-2X1	1	CONs_SCH.Lib				
DB2G42900L1	Schottky Diode SMD (Pad Length X Width)	D1	0402_D	D SCHOTTKY_S	D SCHOTTKY_S	1	Diode_SCH.Lib				
RB520SM-30T2R	Diode SMD (Pad Length X Width)	D2, D11	DO214-AC	D_S	D_S	2	Diode_SCH.Lib				
1N4148	Diode SMD (Pad Length X Width)	D3, D4	D(S1206)	D_S	D_S	2	Diode_SCH.Lib	D(S1206)			
B160-13-F	Schottky Diode SMD (Pad Length X Width)	D5	DSCHOTTKY(S1206)	D SCHOTTKY_S	D SCHOTTKY_S	1	Diode_SCH.Lib	DSCHOTTKY(S1206)			
ZMM5225B	Diode SMD (Pad Length X Width)	D6, D7, D8	DO-214	D_S	D_S	3	Diode_SCH.Lib		ZMM5225B		
VEMD1060X01	Diode SMD (Pad Length X Width)	D9	0805_D - duplicate	D_S	D_S	1	Diode_SCH.Lib		VEMD1060X01		
5.0SMDJ30A	Diode SMD (Pad Length X Width)	D10	DO214-AC	D_S	D_S	1	Diode_SCH.Lib		5.0SMDJ26CA		
PGB102ST23	Surface Mount Polymeric ESD Suppressors	ES1	SOT-23	PGB102ST23	PGB102ST23	1	Misc_SCH.Lib				
MC36205	SMD Resistors	F1	2512_R	R1_S	R1_S	1	Res_SCH.lib				
FEDUCIAL	FEDUCIAL MARK	FD1, FD2, FD3, FD4	FEDUCIAL-1.5	FEDUCIAL	FEDUCIAL	4	Misc_SCH.Lib				
62401621722	Conn Headr 16pos 2mm r/a t/h	J1	62401621722	62401621722	62401621722	1	62401621722.SchLib		62401621722	Wurth Electronics	
18.0uH	Inductor	L1	INDUCTOR (6.7X6.7)-SMD	INDUCTOR	INDUCTOR	1	Inductor_SCH.Lib				
1uH	Inductor	L2	INDUCTOR (5.5X6)-SMD	INDUCTOR	INDUCTOR	1	Inductor_SCH.Lib		SRP5030CA-1R0M		
EMI Suppression Ferrite Bead	Inductor	L3, L5, L6, L7	0603_L	INDUCTOR	INDUCTOR	4	Inductor_SCH.Lib		742792602		
74437346068	Inductor	L4	INDUCTOR (7.3X7.3)-SMD	INDUCTOR	INDUCTOR	1	Inductor_SCH.Lib				
Red	Light Emitting Diode SMD (Pad Length X Width)	LED1	0603_D	LED_S	LED_S	1	Diode_SCH.Lib				
White	Light Emitting Diode SMD (Pad Length X Width)	LED2	0603_D	LED_S	LED_S	1	Diode_SCH.Lib				
LED_BLUE	Light Emitting Diode SMD (Pad Length X Width)	LED3	0603_D	LED_S	LED_S	1	Diode_SCH.Lib				
Green	Light Emitting Diode SMD (Pad Length X Width)	LED5	0603_D	LED_S	LED_S	1	Diode_SCH.Lib				
RB088LAM150TFTR	Diode SMD (Pad Length X Width)	PD1	DO214-AC	D_S	D_S	1	Diode_SCH.Lib		RB088LAM150TFTR		
BC847ALT1G	NPN Transistor	Q1, Q2, Q3, Q4, Q5, Q6	SOT-23-DEL	NPN	NPN	6	TRANSISTORS_SCH.Lib	SOT-23-DEL			
BC847	NPN Transistor	Q7, Q8, Q9, Q10, Q12	SOT-23-DEL	NPN	NPN	5	TRANSISTORS_SCH.Lib	SOT-23-DEL	NM_DTC043ZEBTL		
0R	SMD Resistors	R1, R50, R60, R90, R98, R99	0402_R	R1_S	R1_S	6	Res_SCH.lib				
4K7	SMD Resistors	R2	0402_R	R1_S	R1_S	1	Res_SCH.lib				
100R	SMD Resistors	R3, R5	0603_R	R1_S	R1_S	2	Res_SCH.lib	0603_R			
4.7K	SMD Resistors	R4, R31, R34, R56, R64, R71, R74, R97	0402_R	R1_S	R1_S	8	Res_SCH.lib				
1K	SMD Resistors	R6, R24, R25, R36, R37, R38, R54, R61, R63, R69, R79, R81, R83, R88, R91, R92, R94, R101	0402_R	R1_S	R1_S	18	Res_SCH.lib				
10K	SMD Resistors	R8, R9, R10, R11, R21, R42, R52, R53	0402_R	R1_S	R1_S	8	Res_SCH.lib				
100K	SMD Resistors	R12, R15, R18	0402_R	R1_S	R1_S	3	Res_SCH.lib				
274K 1%	SMD Resistors	R13	0402_R	R1_S	R1_S	1	Res_SCH.lib				
20.0K	SMD Resistors	R14	0603_R	R1_S	R1_S	1	Res_SCH.lib	0603_R			
10K, 1%	SMD Resistors	R16	0402_R	R1_S	R1_S	1	Res_SCH.lib				
1.5K, 1%	SMD Resistors	R17	0402_R	R1_S	R1_S	1	Res_SCH.lib				
15K	SMD Resistors	R19, R20, R51	0402_R	R1_S	R1_S	3	Res_SCH.lib				
22R	SMD Resistors	R22, R23	0402_R	R1_S	R1_S	2	Res_SCH.lib				
DNM	SMD Resistors	R26, R28, R29, R30	0603_R	R1_S	R1_S	4	Res_SCH.lib	0603_R			
150.0K	SMD Resistors	R27	0603_R	R1_S	R1_S	1	NEL-02-03-V100.SCHLIB	0603_R			
300R	SMD Resistors	R32	0402_R	R1_S	R1_S	1	Res_SCH.lib				
47K	SMD Resistors	R33, R35, R75	0402_R	R1_S	R1_S	3	Res_SCH.lib				
10.0K	SMD Resistors	R39	0603_R	R1_S	R1_S	1	Res_SCH.lib	0603_R			
100K 1%	SMD Resistors	R40	0402_R	R1_S	R1_S	1	Res_SCH.lib				
10K NTC	SMD Resistors	R41	0402_R	R1_S	R1_S	1	Res_SCH.lib				
270R 1%	SMD Resistors	R43	0402_R	R1_S	R1_S	1	Res_SCH.lib				
500R 1%	SMD Resistors	R44	0805_R	R1_S	R1_S	1	Res_SCH.lib	0805_R			
470R	SMD Resistors	R45, R47, R72, R96	0402_R	R1_S	R1_S	4	Res_SCH.lib		RT0603DRE07470RL		
0R	SMD Resistors	R46, R48, R49	1206_R	R1_S	R1_S	3	Res_SCH.lib	1206_R			
DNM	SMD Resistors	R55, R70	0402_R	R1_S	R1_S	2	Res_SCH.lib				
9.1K	SMD Resistors	R57	0805_R	R1_S	R1_S	1	Res_SCH.lib	0805_R			
10R	SMD Resistors	R58	0402_R	R1_S	R1_S	1	Res_SCH.lib				
18K	SMD Resistors	R59	0402_R	R1_S	R1_S	1	Res_SCH.lib				
5.6K	SMD Resistors	R62, R89, R100	0402_R	R1_S	R1_S	3	Res_SCH.lib				
10K,1%	SMD Resistors	R65	0402_R	R1_S	R1_S	1	Res_SCH.lib				
22.1R,1%	SMD Resistors	R66	0402_R	R1_S	R1_S	1	Res_SCH.lib				
22.1 R ,1%	SMD Resistors	R67, R68	0402_R	R1_S	R1_S	2	Res_SCH.lib				
470	SMD Resistors	R78	0402_R	R1_S	R1_S	1	Res_SCH.lib				
100K1%	SMD Resistors	R80, R84	0805_R	R1_S	R1_S	2	Res_SCH.lib	0805_R			
10K, 1%	SMD Resistors	R82	0805_R	R1_S	R1_S	1	Res_SCH.lib	0805_R			
10K1%	SMD Resistors	R86	0603_R	R1_S	R1_S	1	Res_SCH.lib	0603_R			
10K1%	SMD Resistors	R93	1206_R	R1_S	R1_S	1	Res_SCH.lib	1206_R			
10K1%	SMD Resistors	R95	0805_R	R1_S	R1_S	1	Res_SCH.lib	0805_R			
VOLTREG	Voltage Regulator	REG1	SOT-223	VOLTREG	VOLTREG	1	Regulators_SCH.Lib				
OS102011MA1QN1	Slide switch SPDT	SW1	OS102011MA1QN1	SW-PB-SPDT-SLIDE	SW-PB-SPDT-SLIDE	1	Misc_SCH.Lib				
TESTPOINT	Test Point	TP1, TP2, TP3, TP4, TP5, TP6, TP7, TP8, TP9, TP11, TP12, TP13, TP14	PAD(D0.6) - SMD	TESTPOINT	TESTPOINT	13	Misc_SCH.Lib				
Winbond W25Q128JV	Mbit SPI Serial Flash	U1	SOIC127P790X216-8N	SST25VFxxxB	SST25VFxxxB	1	ICs_SCH.Lib				
L89		U2	L89	L89	L89	1	Quectel_L89_SCH_Part_AD_20180802.SCHLIB				
LM4040	Very Low Supply Current 3-Pin Microprocessor Reset Monitors	U3, U15	SOT-23	LM4040_1	LM4040_1	2	ICs_SCH.Lib		LM4040QCEM3-3.0/ NOPB		
LMR14030		U4	LMR14030	LMR14030	LMR14030	1	DIFFERENTIAL.SCHLIB	HTSSOP-20			
BQ24253	SYNCHRONOUS SWITCHMODE, LI-ION AND LI-POLYMER CHARGE-MANAGEMENT IC WITH INTEGRATED POWER FETs	U5	QFN50P400X400X100-25N	BQ24103A_1	BQ24103A_1	1	ICs_SCH.Lib				
M66	Ultra-Small Quad-Band GSM/ GPRS Module 44-Pin LCC	U6	QUECTEL_M66FA-04-STD/M66FAR01A04	M66FA-04-STD/M66FAR01A11BT	M66FA-04-STD/M66FAR01A11BT	1	M66FA-04-STD_M66FAR01A11BT.SchLib			Quectel	M66FA-04-STD/M66FAR01A11BT
MIC69303	Single supply 3A LDO	U7	SO-8-EP	MIC69303	MIC69303	1	Regulators_SCH.Lib				
TPS61032	TPS6103x 96% Efficient Synchronous Boost Converter With 4A Switch	U8	HTSSOP-20	TPS61032	TPS61032	1	ICs_SCH.Lib				
CP2102	SINGLE-CHIP USB TO UART BRIDGE	U9	QFN28 - HP	CP2102	CP2102	1	ICs_SCH.Lib				
PR502	PR502	U10	SO6	PR502	PR502	1	ICs_SCH.Lib		TLP3905		
LSM6DS3	8Bit Tri-axial Acceleration sensor	U11	LGA-14	LSM6DS3	LSM6DS3	1	ICs_SCH.Lib		LSM6DS3		
E-SIM	ESIM model	U12	MFF2	E-SIM	E-SIM	1	ESim.SchLib	Module MFF2 embedded			
SN74LV1T34DBVR	Single Power Supply BUFFER Logic Level Shifter _no enable_ 5-SOT-23 -40 to 125	U13	SOT95P280X145-5N	SN74LV1T34DBVR	SN74LV1T34DBVR	1	SN74LV1T34DBVR.SchLib			Texas Instruments	SN74LV1T34DBVR
RL78-G13	16-Bit Single-Chip Microcontroller	U16	QFP44	RL78-G13-44	RL78-G13-44	1	ICs_SCH.Lib				
LFXTAL003	Crystal 0.032	XTAL1	XTAL_LFXT	LFXTAL003	LFXTAL003	1	LFXTAL003		LFXTAL003	IQD Frequen	