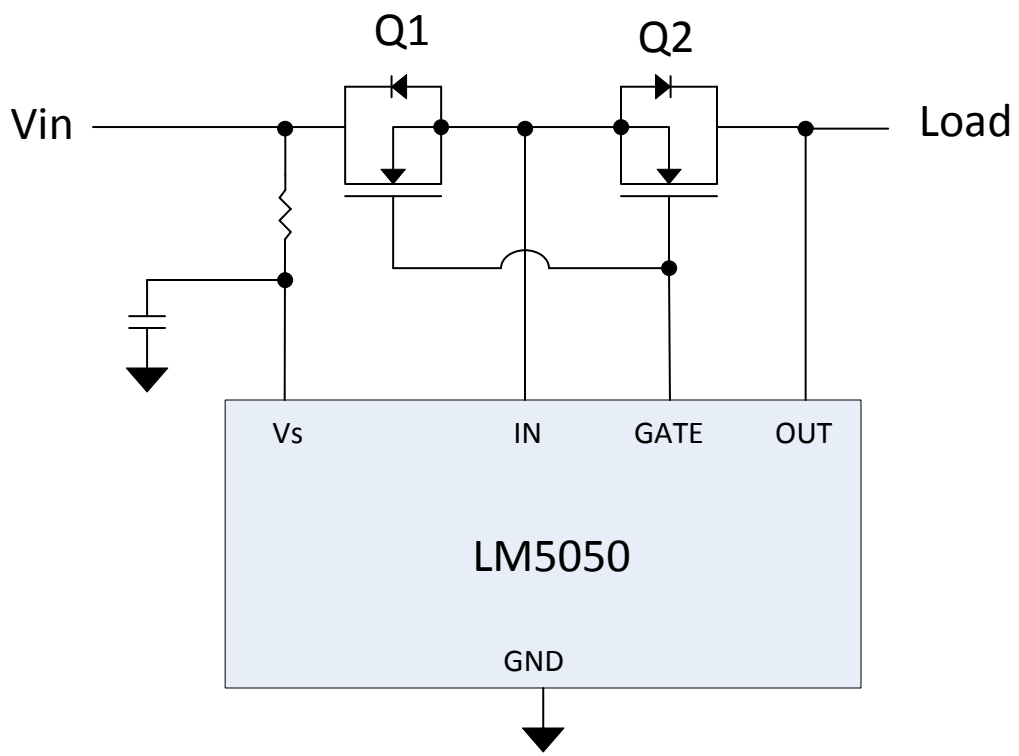
Q1
Q2
Vin
Load
Vs
IN
GATE
OUT
LM5050
GND