MCU

WDT

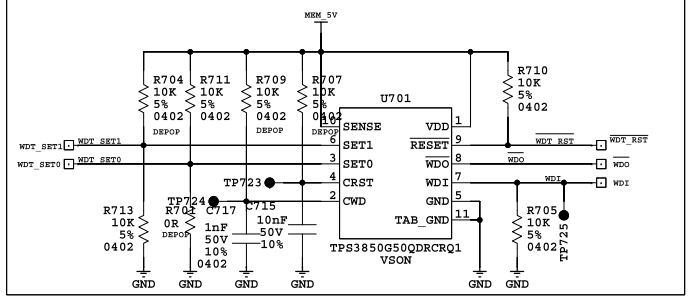

DEBUG_CONN

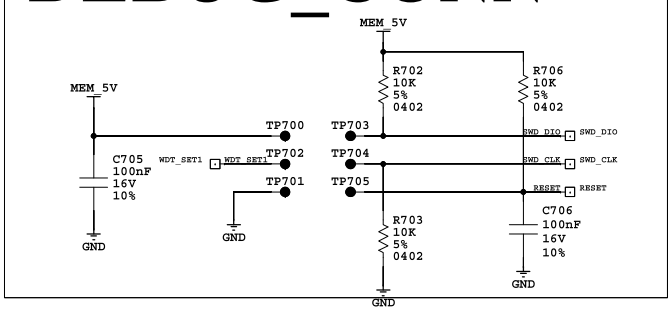

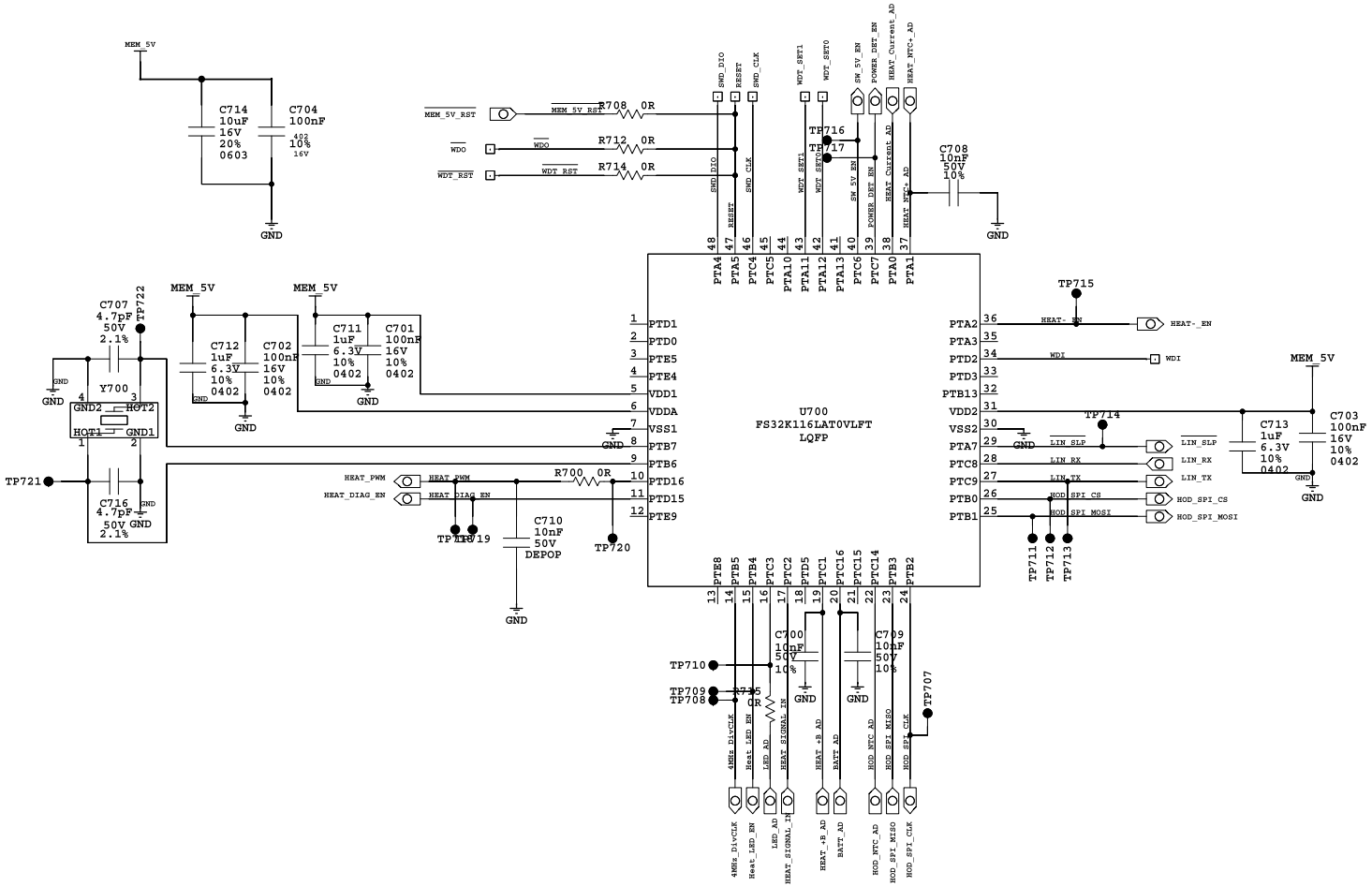

REVISIONS

No.	DESCRIPTION	AUTHOR/DATE
1	Change WDT block to TPS3850	Zhang Kai/20211109
2	Add TP706 connect to WDT_SET1	Zhang Kai/20211109
3	change TP702 connection to WDT_SET0	Zhang Kai/20211109
4	U700 pin15 is changed to HEAT_LED_EN	Zhang Kai/20211109
5	U700 pin16 is changed to LED_AD	Zhang Kai/20211109
6	U700 pin17 is changed to HEAT_SIGANL_IN	Zhang Kai/20211109
7	U700 pin33 is connected to WDT_RST;	Zhang Kai/20211109
8	U700 pin35 is connection deleted	Zhang Kai/20211109
9	U700 pin42 is connected to WDT_SET0	Zhang Kai/20211109
10	U700 pin43 is connected to WDT_SET1	Zhang Kai/20211109
11	Move WDT_RST to pin47 to avoid the impact of MEM5V overvoltage	Zhang Jiahe/20211111
	Add R715	Zhang Jiahe/20211111
	C715 changed to 1nF	Zhang Kai/20211116
	Changed TPS3850H01 to TPS3850G50	Zhang Kai/20211122
	Changed R702,R703,R704,R705,R706,R707,R710,R711 to LHL[illegible]	Zhang Kai/20211209
	Changed C717 to 1 nF	Zhang Kai/20220217
17	Changed C715 to 10 nF	Zhang Kai/20220217
18	Delete TP706 ,connect WDT_SET1 to TP702	Zhang Kai/20220221

Yanfeng

C SIZE

DRAWN	DATE	SHT	OF
Zhang Kai	2022/02/21	6	8