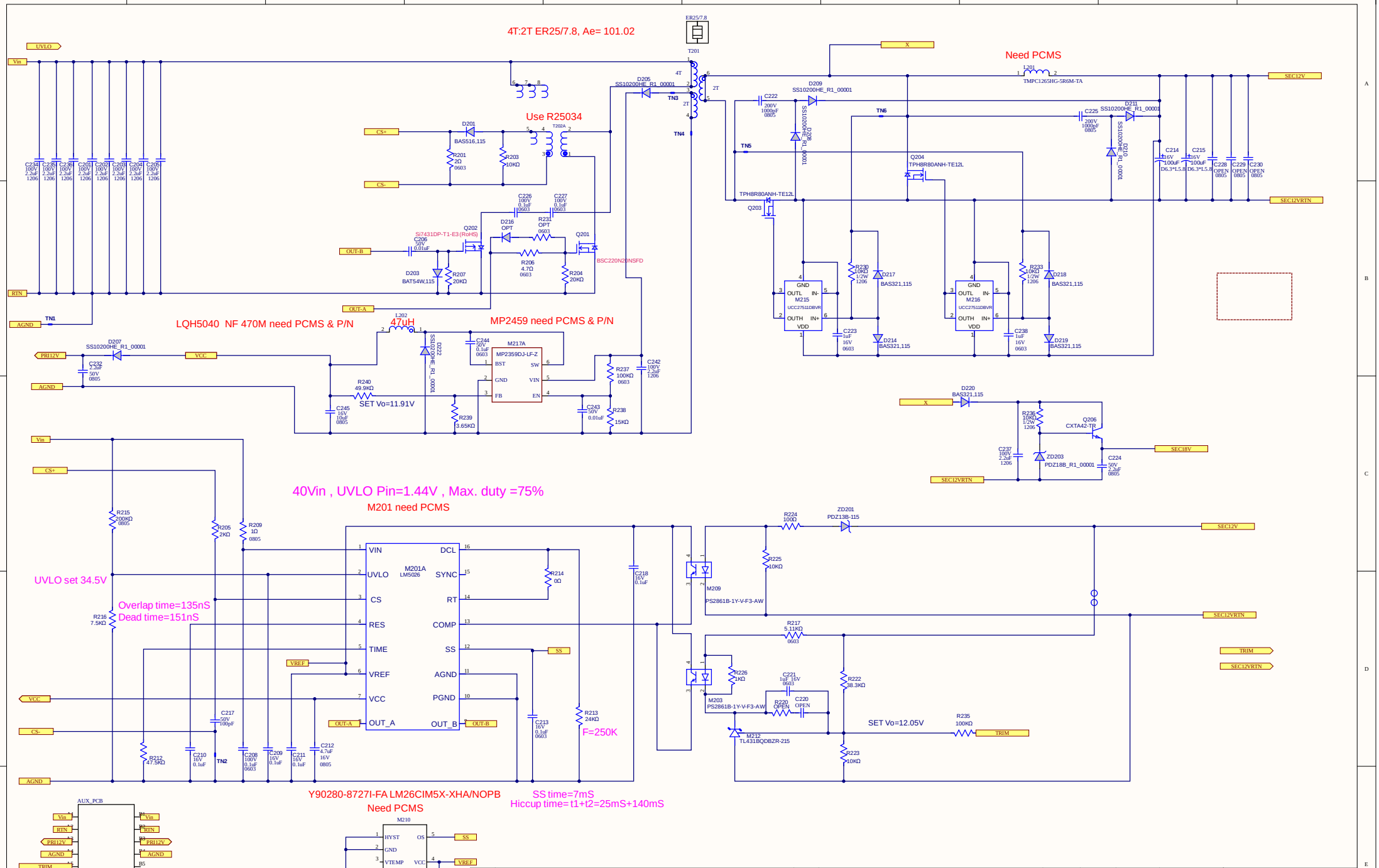
4T:2T ER25/7.8, Ae= 101.02
Need PCMS
Use R25034
LQH5040 NF 470M need PCMS & P/N
47uH
MP2459 need PCMS & P/N
SET Vo=11.91V
40Vin , UVLO Pin=1.44V , Max. duty =75%
M201 need PCMS
UVLO set 34.5V
Overlap time=135nS
Dead time=151nS
F=250K
SET Vo=12.05V
Y90280-8727I-FA LM26CIM5X-XHA/NOPB
Need PCMS
SS time=7mS
Hiccup time= t1+t2=25mS+140mS
M201A
LM5026
M217A
MP2359DJ-LF-Z
M216
UCC27511DBVR
M209
PS2861B-1Y-V-F3-AW
M203
PS2861B-1Y-V-F3-AW
M212
TL431BQDBZR-215
M210
LM26CIM5X
AUX_PCB
ACBEL POLYTECH INC.
FSL022-4C0G-P5A
REVISIONS
ISS
DESCRIPTION
BY
DATE
A
ORIGINAL
Hsiende
12/28/'20
DESIGNER
DATE
APPROVED
DATE
REV: A
Sheet 1 of 1