Backlight circuit

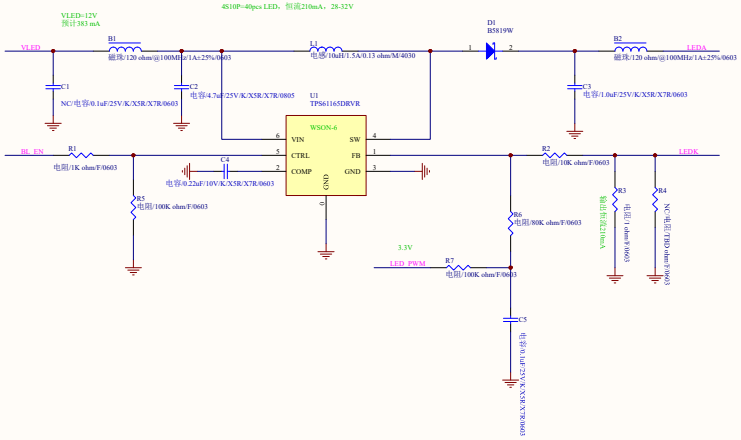

LCM

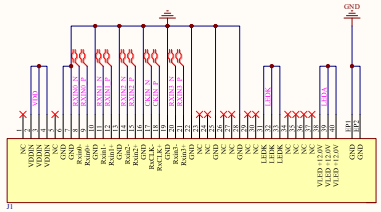

Board

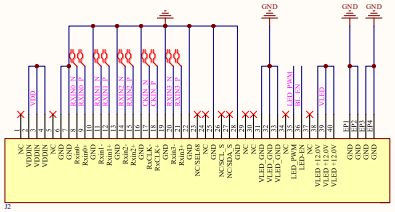
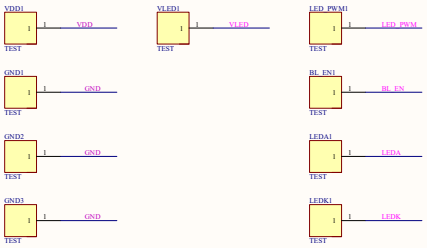
Test point