-12V

Vout= -12V
TBD/0.019A

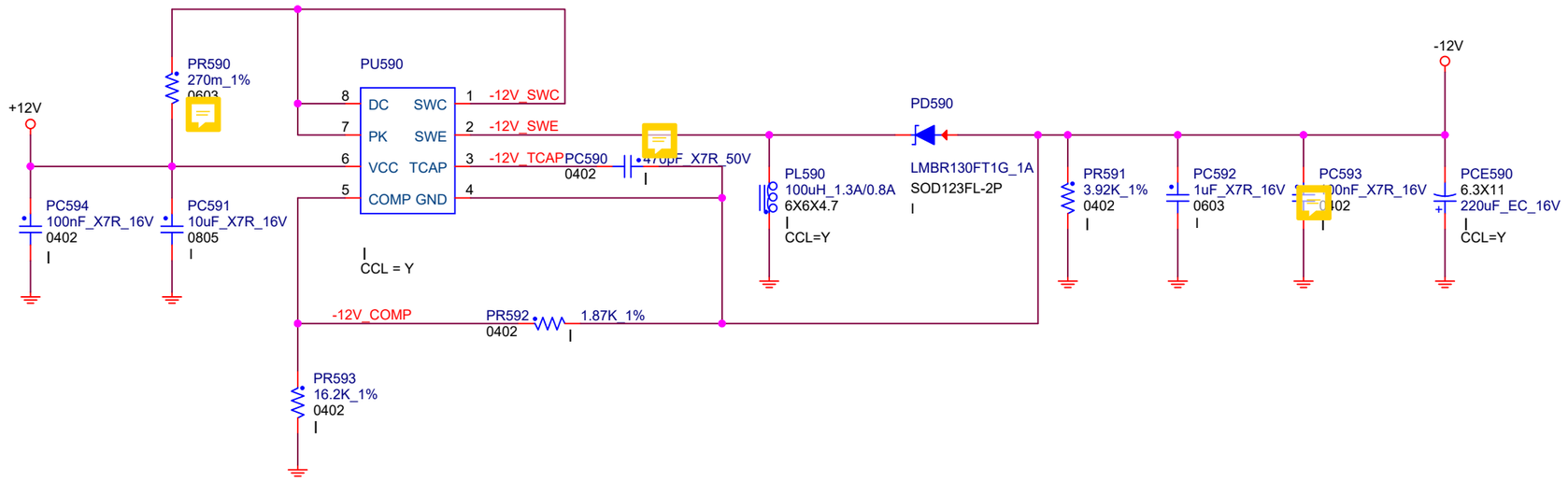

FOXCONN®
Hon Hai Precision Industry Co. Ltd.
Foxconn NPCEBG
Foxconn WuHan
China
Phone: 027-59603888
Fax:

Title		
77. -12V		
Size B	Document Number B660_SFF	Rev RFI