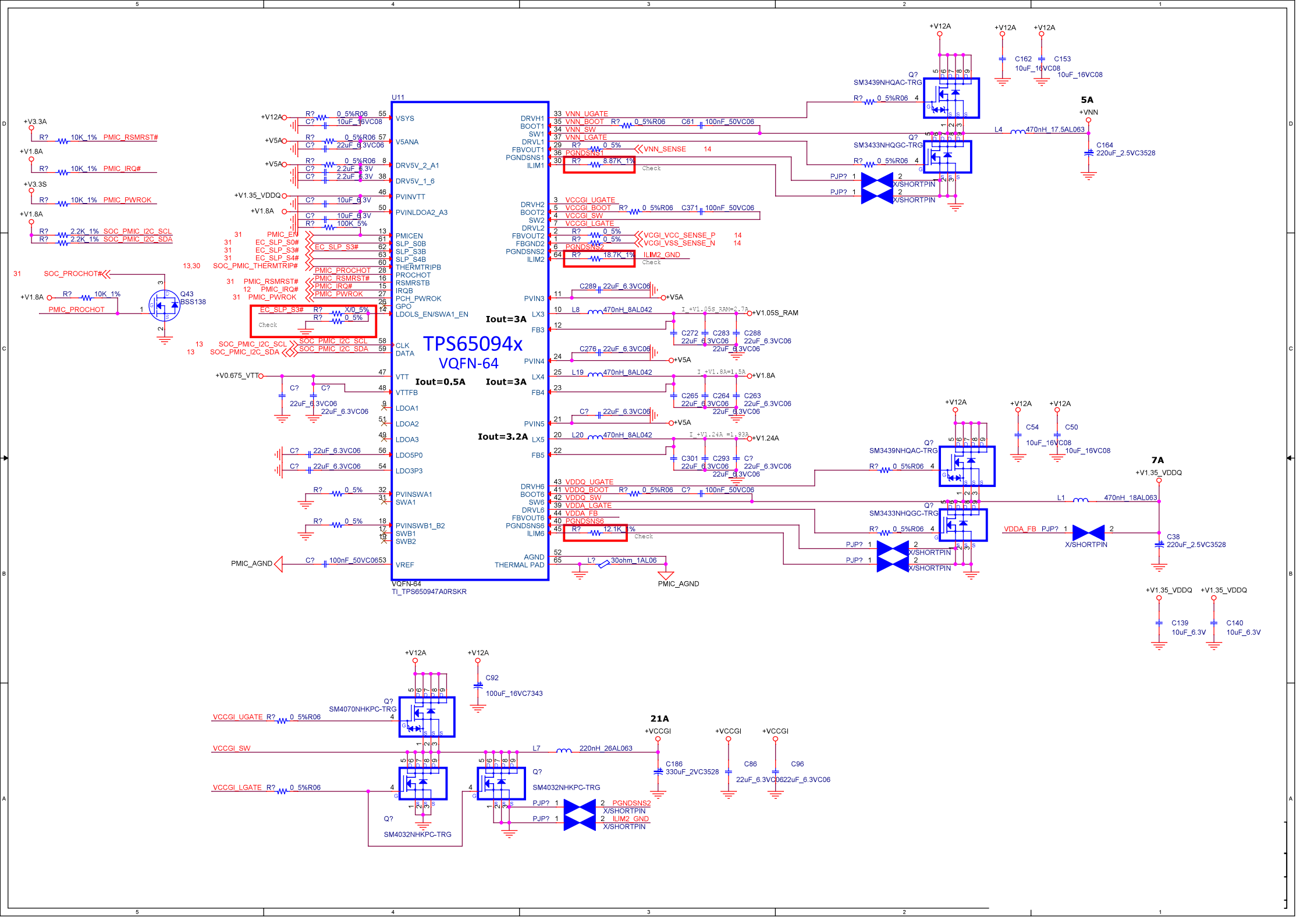

TPS65094x
VQFN-64
U11
VQFN-64
TI_TPS650947A0RSKR
Iout=0.5A
Iout=3A
Iout=3A
Iout=3.2A
VSYS
V5ANA
DRV5V_2_A1
DRV5V_1_6
PVINVTT
PVINLDOA2_A3
PMICEN
SLP_S0B
SLP_S3B
SLP_S4B
THERMTRIPB
PROCHOT
RSMRSTB
IRQB
PCH_PWROK
GPO
LDOLS_EN/SWA1_EN
CLK
DATA
VTT
VTTFB
LDOA1
LDOA2
LDOA3
LDO5P0
LDO3P3
PVINSWA1
SWA1
PVINSWB1_B2
SWB1
SWB2
VREF
DRVH1
BOOT1
SW1
DRVL1
FBVOUT1
PGNDSNS1
ILIM1
DRVH2
BOOT2
SW2
DRVL2
FBVOUT2
FBGND2
PGNDSNS2
ILIM2
PVIN3
LX3
FB3
PVIN4
LX4
FB4
PVIN5
LX5
FB5
DRVH6
BOOT6
SW6
DRVL6
FBVOUT6
PGNDSNS6
ILIM6
AGND
THERMAL PAD
VNN_UGATE
VNN_BOOT
VNN_SW
VNN_LGATE
VNN_SENSE
VCCGI_UGATE
VCCGI_BOOT
VCCGI_SW
VCCGI_LGATE
VCGI_VCC_SENSE_P
VCGI_VSS_SENSE_N
ILIM2_GND
VDDQ_UGATE
VDDQ_BOOT
VDDQ_SW
VDDA_LGATE
VDDA_FB
PGNDSNS6
PMIC_AGND
+V12A
+V5A
+V1.35_VDDQ
+V1.8A
+V3.3A
+V3.3S
+V0.675_VTT
+V1.05S_RAM
+V1.24A
+VNN
+V1.35_VDDQ
+VCCGI
5A
7A
21A
Q?
SM3439NHQAC-TRG
SM3433NHQGC-TRG
SM4070NHKPC-TRG
SM4032NHKPC-TRG
Q43
BSS138
PJP?
X/SHORTPIN
PMIC_RSMRST#
PMIC_IRQ#
PMIC_PWROK
SOC_PMIC_I2C_SCL
SOC_PMIC_I2C_SDA
SOC_PROCHOT#
PMIC_PROCHOT
EC_SLP_S0#
EC_SLP_S3#
EC_SLP_S4#
SOC_PMIC_THERMTRIP#
PMIC_EN
PMIC_RSMRST#
PMIC_IRQ#
PMIC_PWROK
VDDA_FB
C162
C153
C164
C54
C50
C38
C139
C140
C92
C186
C86
C96
L4
L1
L7
L8
L19
L20
L30
C61
C371
C289
C276
C272
C283
C288
C265
C264
C263
C301
C293
C100nF_50VC06
C100nF_50VC0653
C100nF_16VC7343
C220nF_26AL063
C330uF_2VC3528
C220uF_2.5VC3528
C470nH_17.5AL063
C470nH_18AL063
C30ohm_1AL06