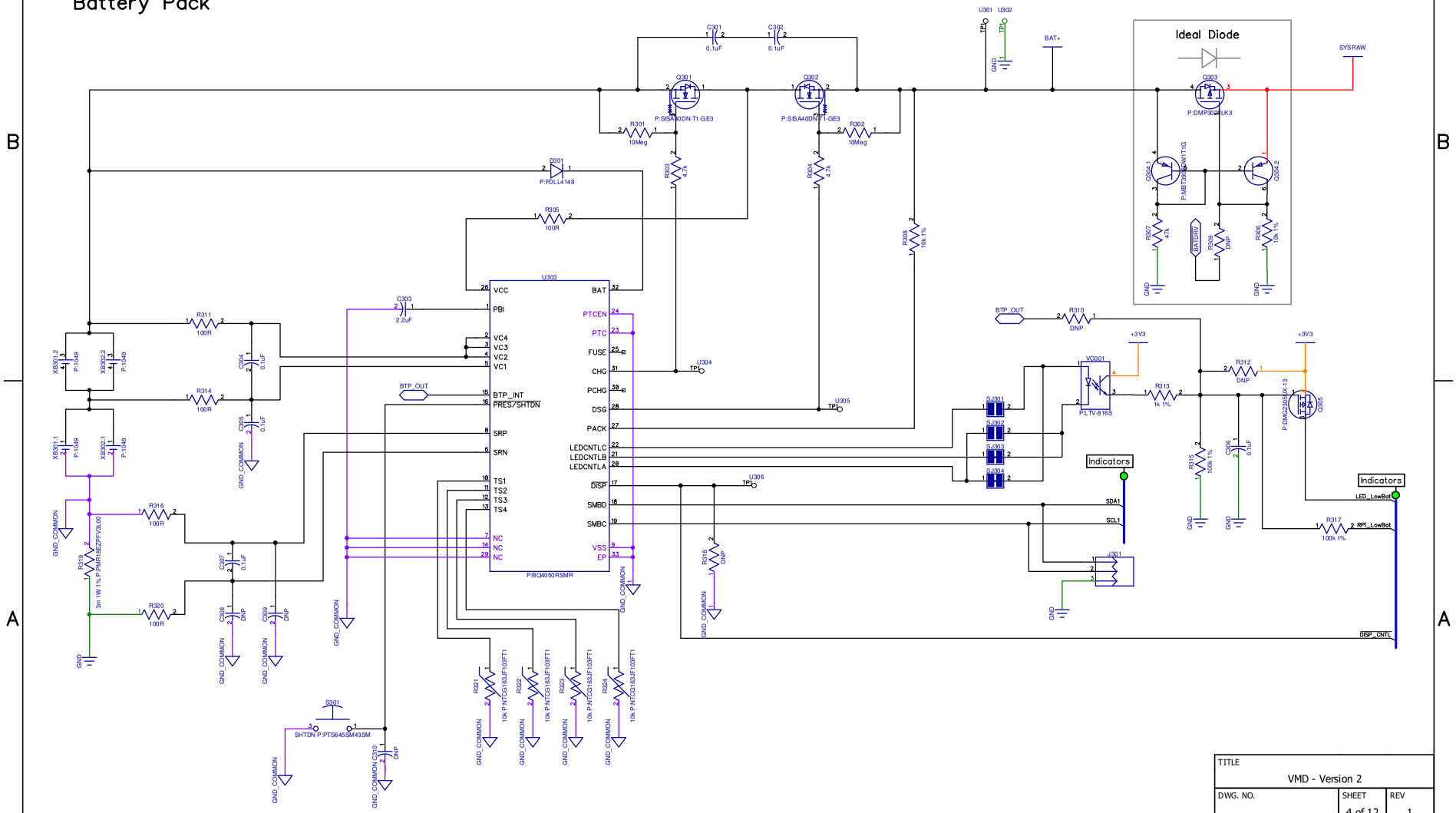Battery Pack