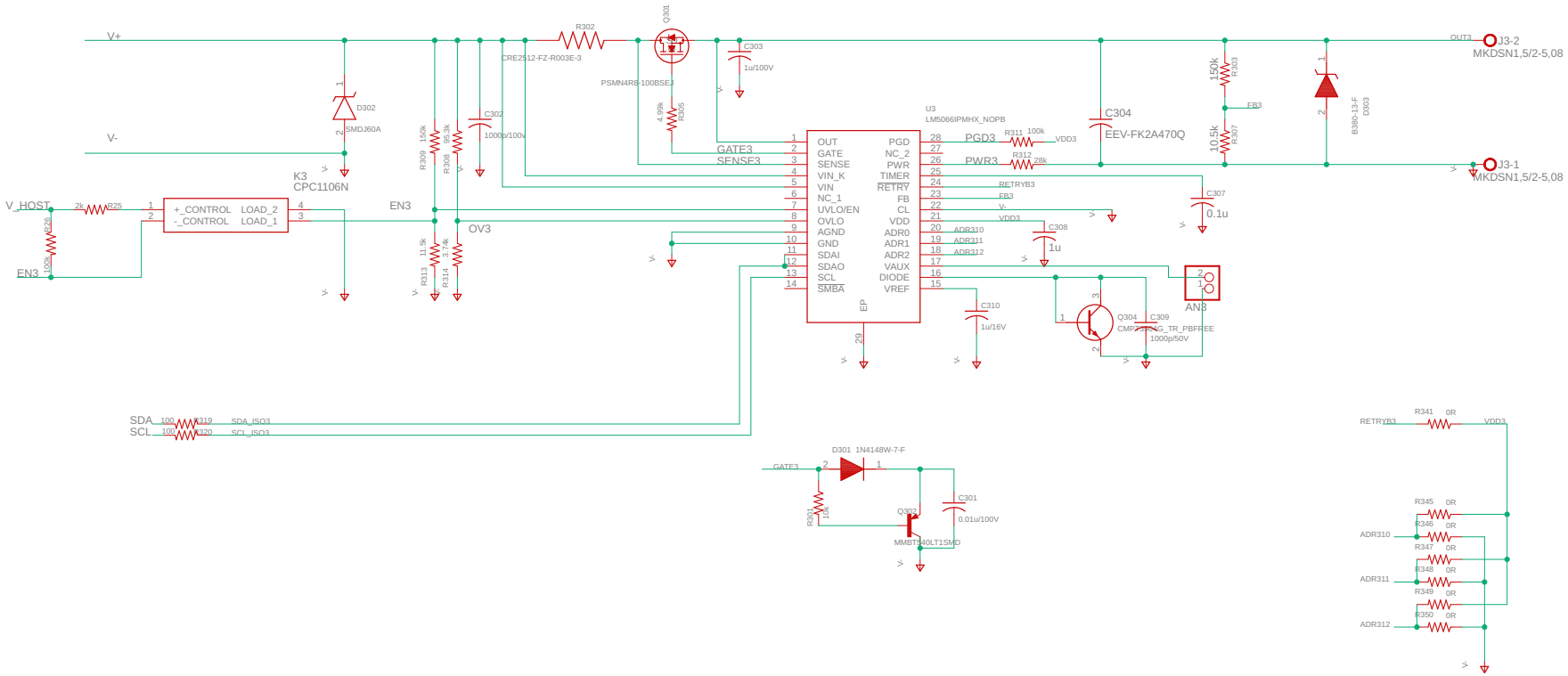

battery_breaker

2023-05-16 9:09 AM

Sheet: 3/4