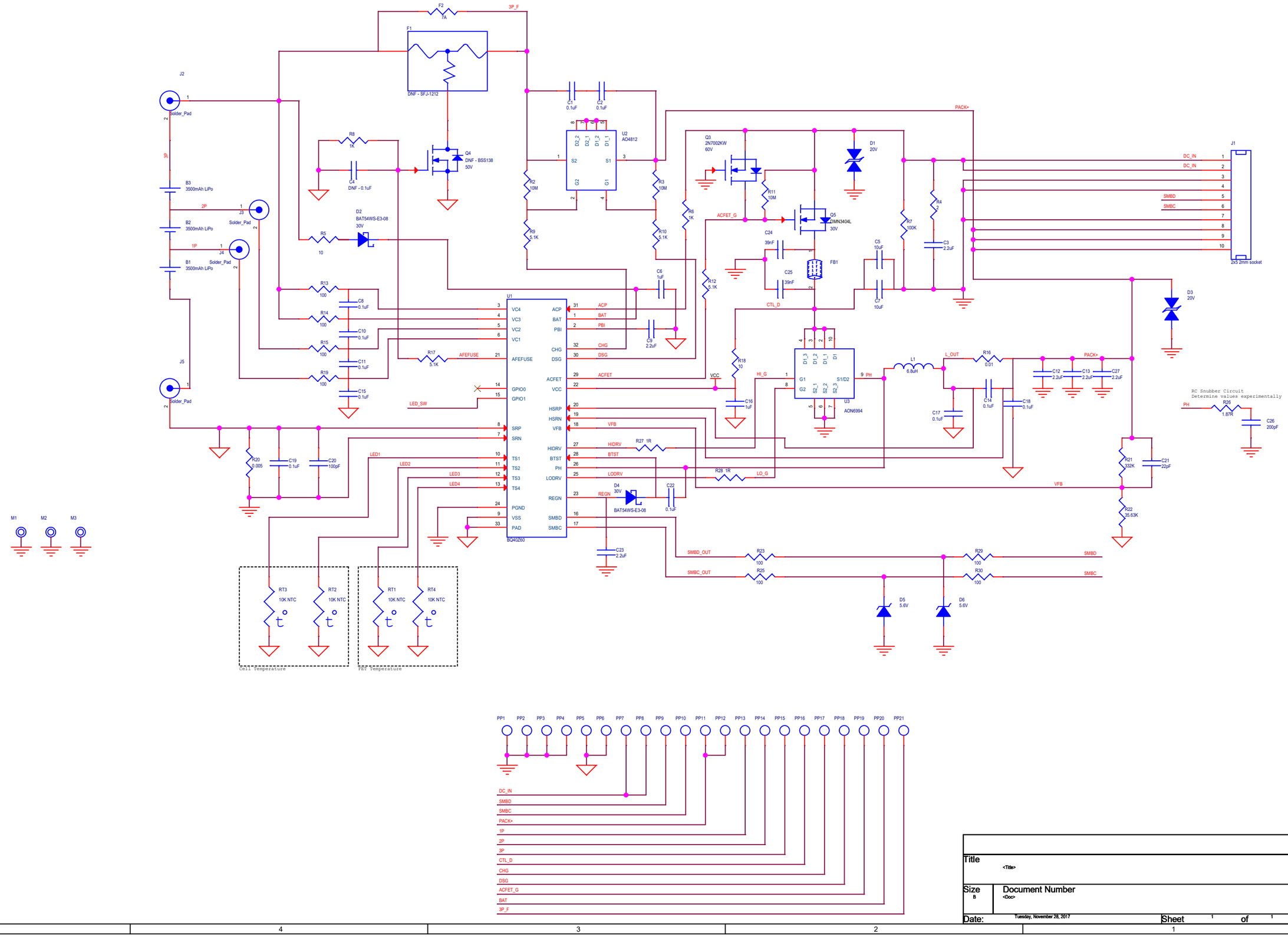

Title	<Title>	
Size B	Document Number <Doc>	Rev <RevCode>
Date: Tuesday, November 28, 2017	Sheet 1 of 1	