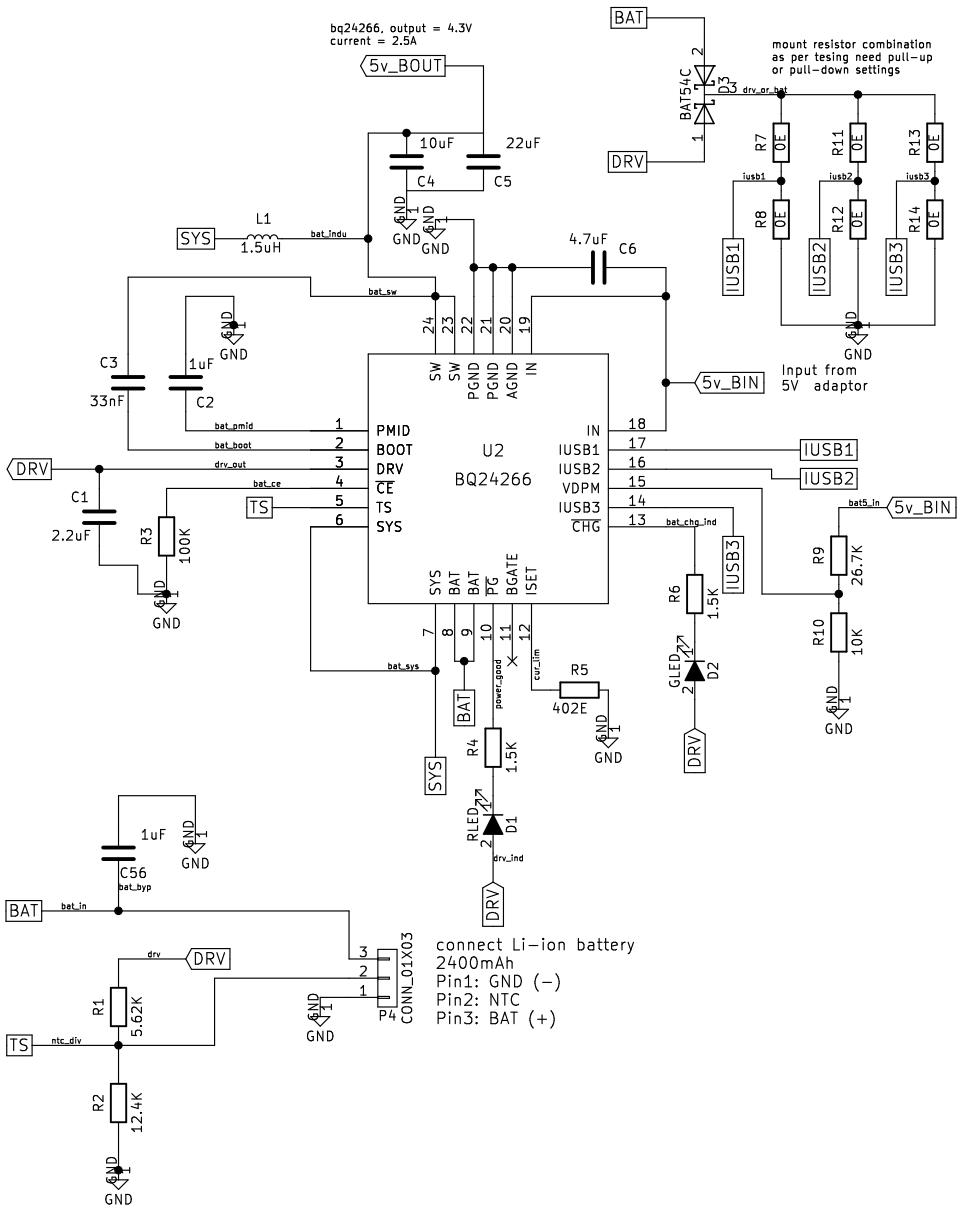

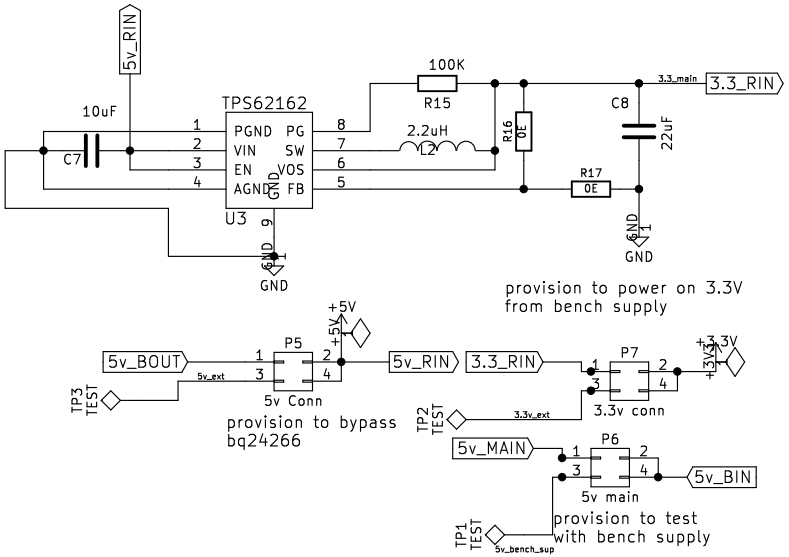

iRam Technologies Pvt Ltd

Sheet: /AC_DC/REACHARGE_3.3v/

File: REACHARGE.sch

Title: GATEWAY REV2

Size: A4	Date: 2016-12-27	**Rev: v1**
KiCad E.D.A. kicad 4.0.5		Id: 4/8