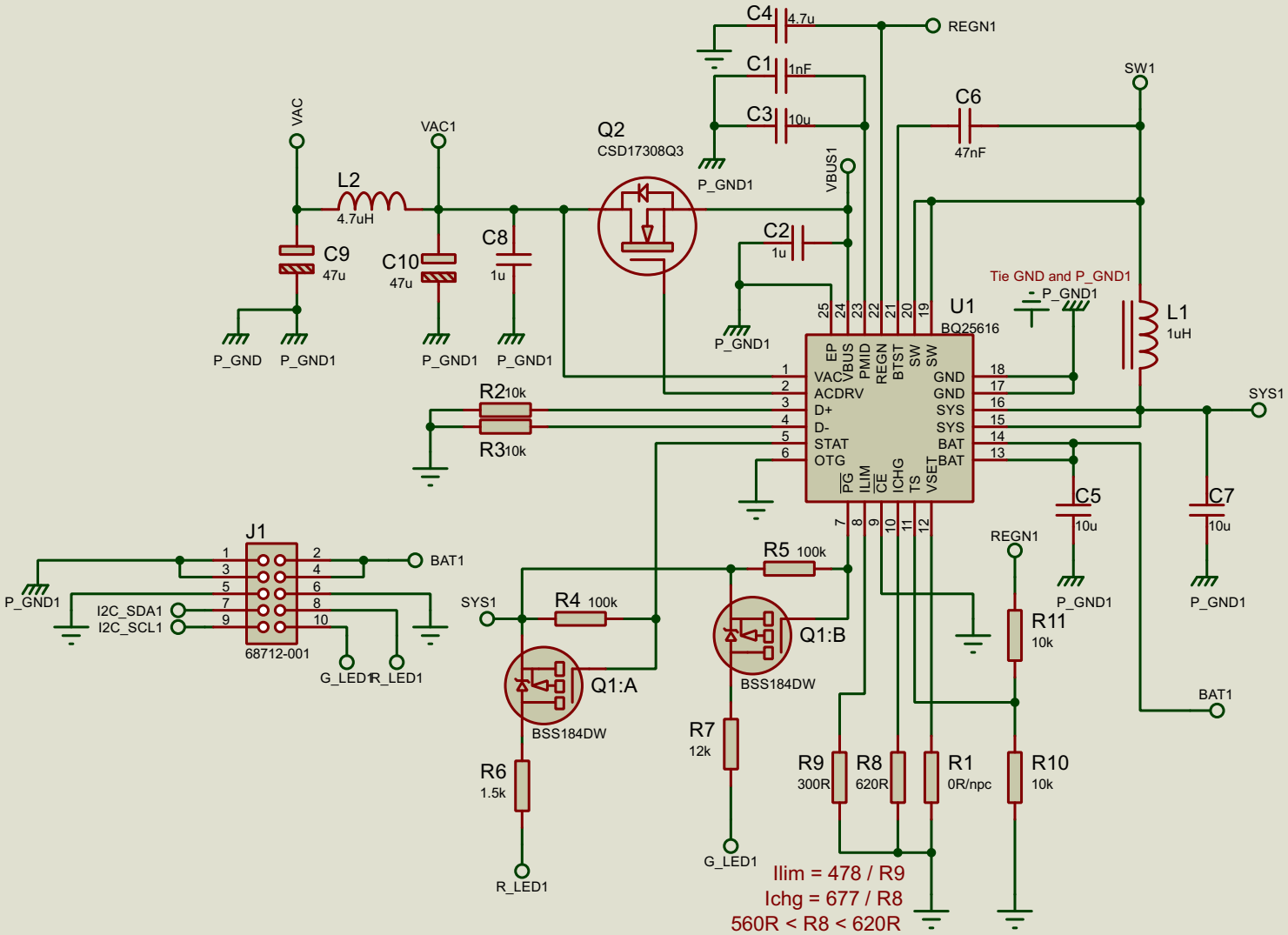
C4
4.7u
REGN1
C1
1nF
C3
10u
C6
47nF
SW1
VAC
VAC1
Q2
CSD17308Q3
P_GND1
VBUS1
L2
4.7uH
C9
47u
C10
47u
C8
1u
C2
1u
Tie GND and P_GND1
P_GND1
U1
BQ25616
L1
1uH
P_GND
P_GND1
P_GND1
P_GND1
P_GND1
EP
VBUS
PMID
REGN
BTST
SW
SW
VAC
ACDRV
D+
D-
STAT
OTG
GND
GND
SYS
SYS
BAT
BAT
PG
ILIM
CE
ICHG
TS
VSET
R2 10k
R3 10k
SYS1
C5
10u
C7
10u
J1
68712-001
BAT1
P_GND1
I2C_SDA1
I2C_SCL1
G_LED1
R_LED1
R5 100k
REGN1
SYS1
R4 100k
Q1:B
BSS184DW
Q1:A
BSS184DW
R11
10k
P_GND1
P_GND1
BAT1
R7
12k
R6
1.5k
R9
300R
R8
620R
R1
0R/npc
R10
10k
G_LED1
R_LED1
Ilim = 478 / R9
Ichg = 677 / R8
560R < R8 < 620R