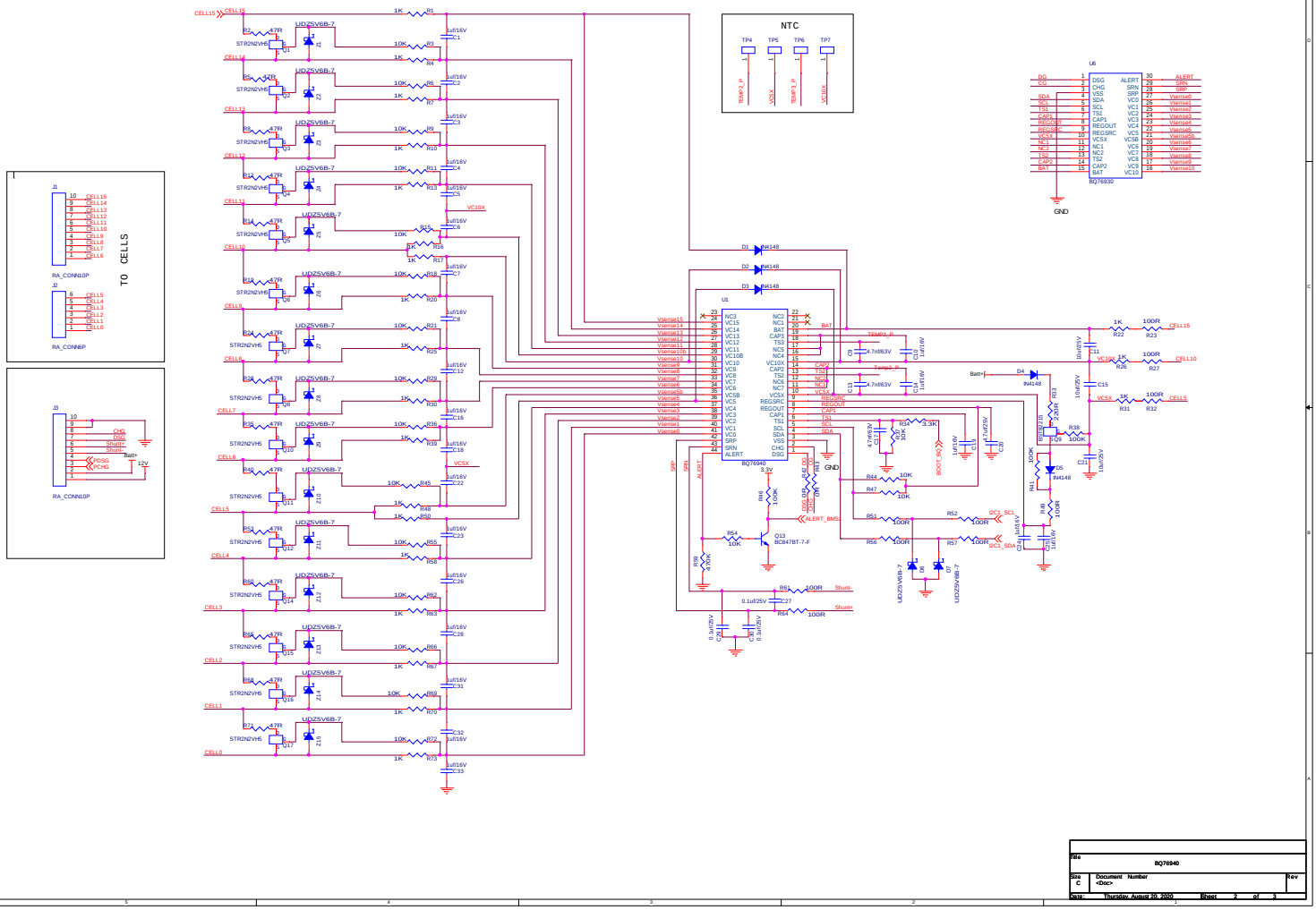

Title	BQ76940
Size C	Document Number <Doc>
Rev	
Date: Thursday, August 20, 2020	Sheet 2 of 3