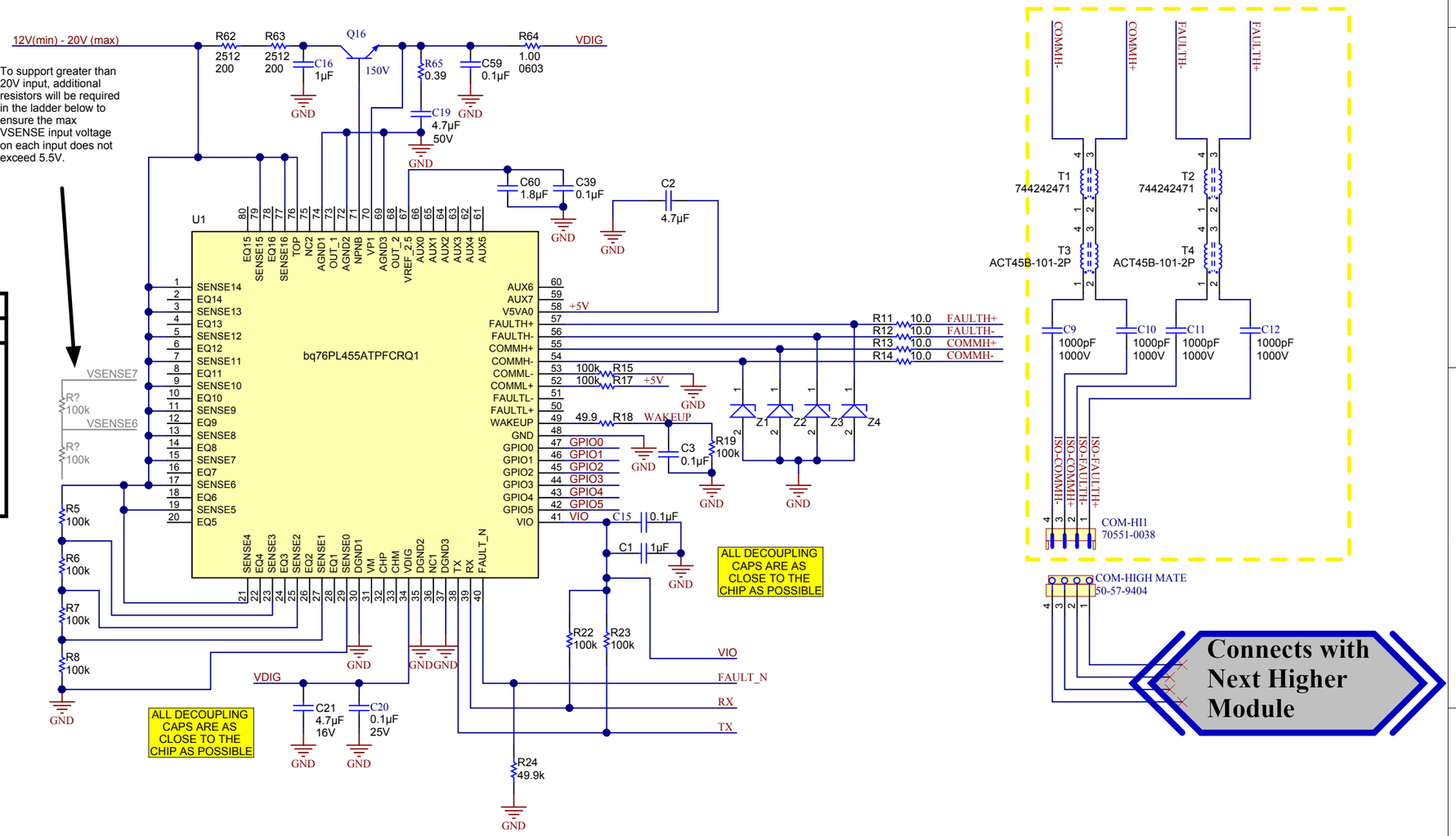

Revision History

Revision	Notes
05/05/2015	First release

Texas Instruments and/or its licensors do not warrant the accuracy or completeness of this specification or any information contained therein. Texas Instruments and/or its licensors do not warrant that this design will meet the specifications, will be suitable for your application or fit for any particular purpose, or will operate in an implementation. Texas Instruments and/or its licensors do not warrant that the design is production worthy. You should completely validate and test your design implementation to confirm the system functionality for your application.

Orderable: EVM_orderable	Designed for: TI Information - Selective Disclosure	Mod Date: 5/19/2015
TID #: TID	Project Title: bq76PL455A-Q1 - Bridge Reference Schematic	
Number: Rev: E1	Sheet Title: bq76PL455A-Q1	
SVN Rev: Version control disabled	Assembly Variant: -100A	Sheet: 1 of 1
Drawn By: Not shown in title block	File: bq76PL455A-Q1.SchDoc	Size: B
Engineer: Stephen Holland	Contact: http://www.ti.com/support	

TEXAS INSTRUMENTS
http://www.ti.com
© Texas Instruments 2012