Discrete brown-out function for the UCC28180

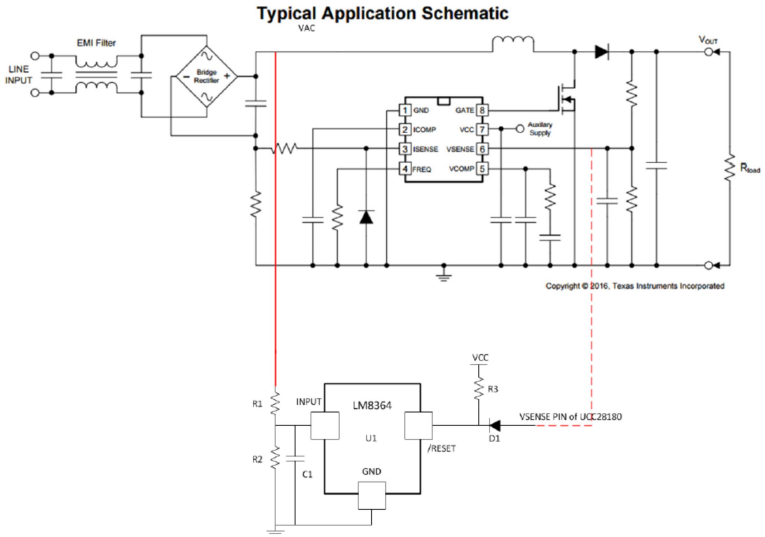

To apply brown out function with UCC28180, a external circuit with LM8364 is needed.

R1/R2 forms a resistor divider and connect to VAC to sensing input ac voltage.

C1 is bypass capacitor of INPUT pin of LM8364.

The output of LM8364 is an open collector/drain which can be used to clamp the Vsense Pin of UCC28180 below 0.82V. Pull down Vsense pin will trigger OLP(open loop protection) to turn off UCC28180, and voltage of COMP is 0 in OLP fault mode, so ramp up would not be impacted.