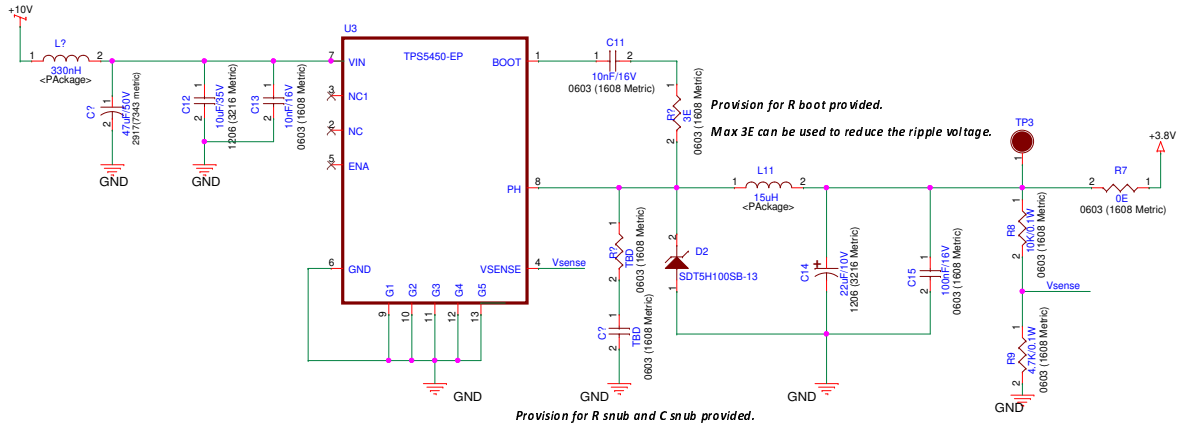

Title		
Size A3	Document Number	Rev
Date: Wednesday, July 19, 2023	Sheet 1 of 1	