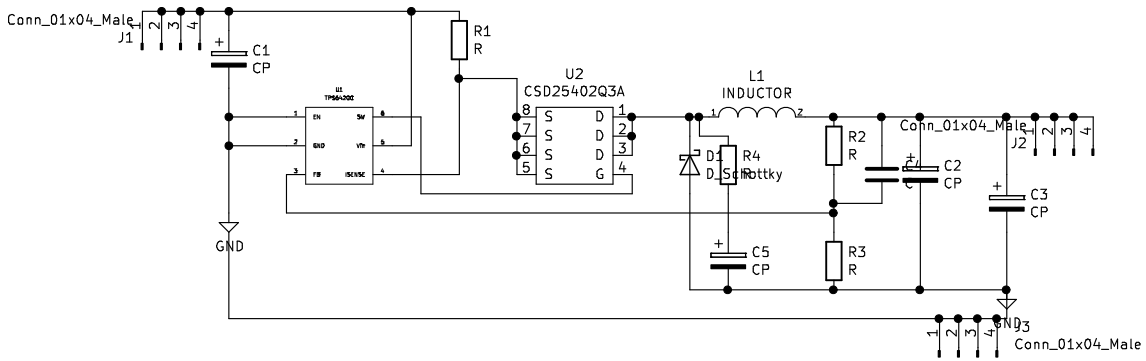


Sheet: /
File: buck.sch

**Title:**

| Size: A4 | Date: | Rev: |
|---|---|---|
| KiCad E.D.A. eeschema no-vcs-found-90818af61ubuntu16.04.1 | | Id: 1/1 |