PWM CONTROLLER

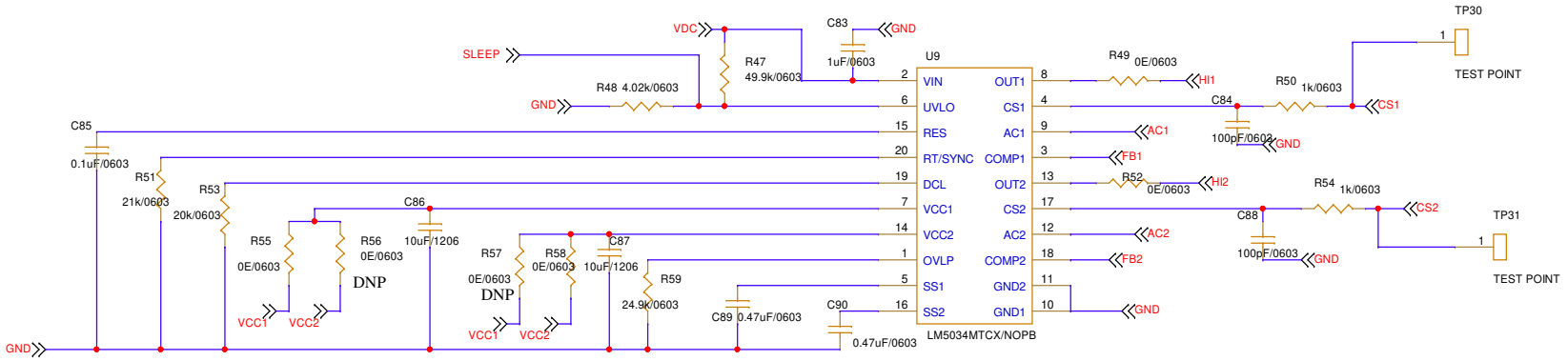

5V

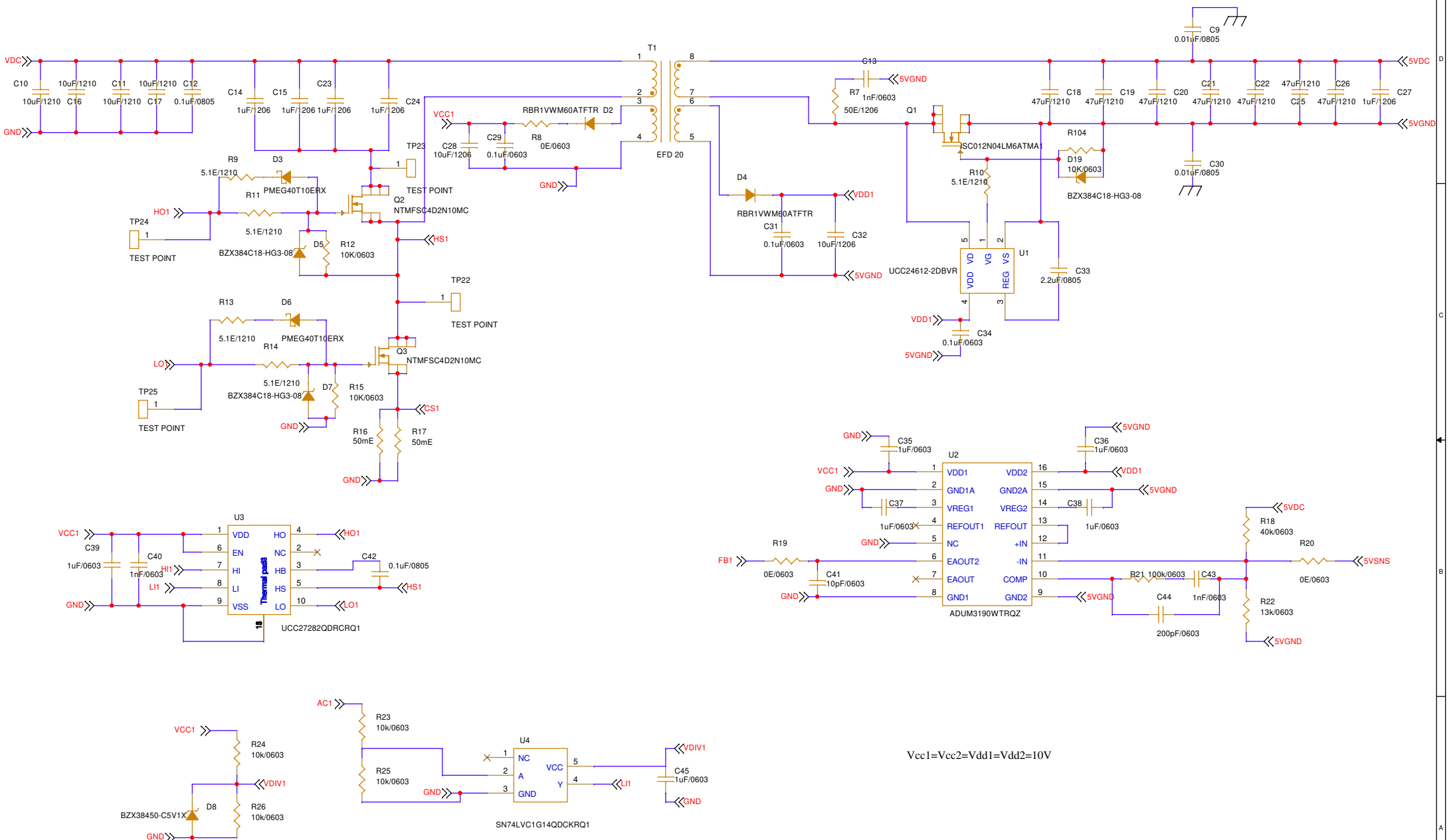

Vcc1=Vcc2=Vdd1=Vdd2=10V

Title <Title>		
Size A3	Document Number <Doc>	Rev <RevCode>
Date: Friday, December 15, 2023	Sheet 2 of 6	