USB Charger

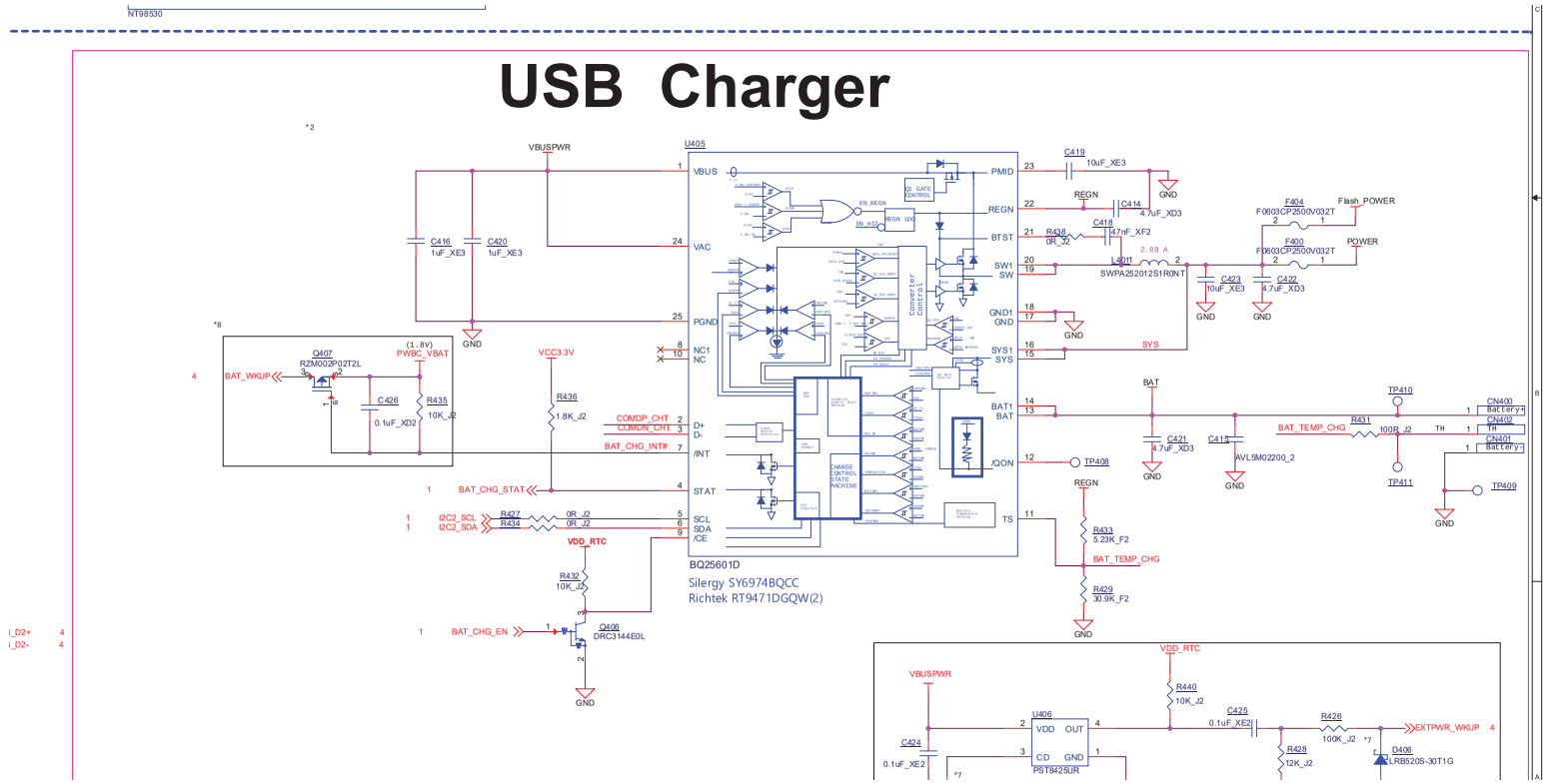
NT98530
VBUSPWR
U405
VBUS
VAC
PGND
NC1
NC
D+
D-
/INT
STAT
SCL
SDA
/CE
PMID
REGN
BTST
SW1
SW
GND1
GND
SYS1
SYS
BAT1
BAT
/QON
TS
BQ25601D
Silergy SY6974BQCC
Richtek RT9471DGQW(2)
C419 10uF_XE3
C414 4.7uF_XD3
C418 47nF_XF2
R438 0R_J2
L401 SWPA252012S1R0NT
2.68 A
C423 10uF_XE3
C422 4.7uF_XD3
F404 F0603CP250V032T
Flash_POWER
F400 F0603CP250V032T
POWER
C416 1uF_XE3
C420 1uF_XE3
Q407 RZM002P02T2L
(1.8V) PWBC_VBAT
BAT_WKUP
C426 0.1uF_XD2
R435 10K_J2
VCC3.3V
R436 1.8K_J2
COMDP_CHT
COMDN_CHT
BAT_CHG_INT#
BAT_CHG_STAT
I2C2_SCL
I2C2_SDA
R427 0R_J2
R434 0R_J2
VDD_RTC
R432 10K_J2
BAT_CHG_EN
Q406 DRC3144E0L
GND
BAT
C421 4.7uF_XD3
C415 AVL5M02200_2
TP410
TP411
TP408
TP409
BAT_TEMP_CHG
R431 100R_J2
CN400 Battery+
CN402 TH
CN401 Battery-
REGN
R433 5.23K_F2
R429 30.9K_F2
SYS
i_D2+
i_D2-
U406
VDD OUT
CD GND
PST8425UR
C424 0.1uF_XE2
R440 10K_J2
C425 0.1uF_XE2
R426 100K_J2
R428 12K_J2
D406 LRB520S-30T1G
EXTPWR_WKUP